For calls outside the UK
Telephone +44 1777 701141
or Fax +44 1777 869983

FREEPHONE:
0800 666397

moodydirect

SUPPORT BASES

BIPODS

Material: Reinforced polyamide threaded bushings and spacers in nickel plated brass, screws in S/S AISI 304.

- Cross Ribs
- Increased Thickness
- Improved Load Resistance
- Improved Flex Resistance

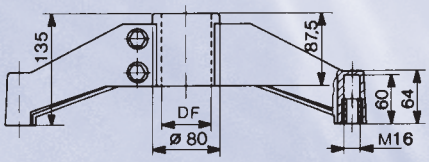

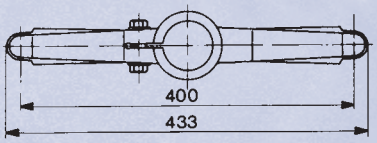

CODE	DF-for tube Ø	
	mm	inch.
15725	48,3	1 1/2
15729	50,9	-

Many other sizes available on all conveyor components!
please call!

BIPODS 120° WITH JOINT

Material: Reinforced polyamide, threaded bushings and spacers in nickel plated brass, screws in S/S AISI 304.

- Cross Ribs
- Increased Thickness
- Improved Load Resistance
- Improved Flex Resistance

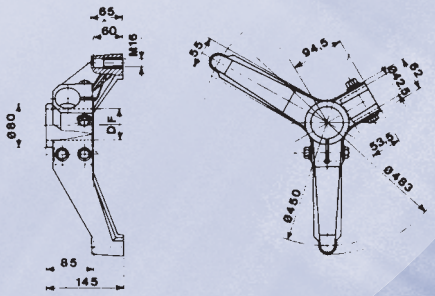

CODE	DF-for tube Ø	
	mm	inch.
15335	48,3	1 1/2
15337	50,9	-

BIPODS 180° WITH JOINT

Material: Reinforced polyamide threaded bushings and spacers in nickel plated brass, screws in S/S AISI 304.

- Cross Ribs
- Increased Thickness
- Improved Load Resistance
- Improved Flex Resistance

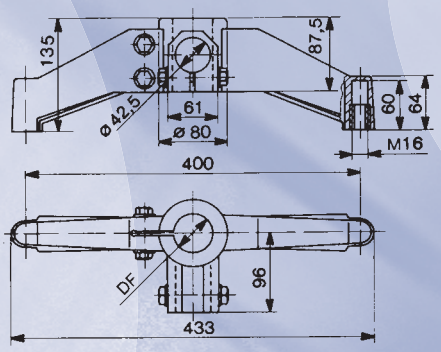

CODE	DF-for tube Ø	
	mm	inch.
15732	48,3	1 1/2
15736	50,9	-