SPXFLOW

INSTRUCTION MANUAL

APV DELTA UF3(A) / UFR3(A)

RELIEF VALVE

FORM NO.: 170784 REVISION: UK-7

READ AND UNDERSTAND THIS MANUAL PRIOR TO OPERATING OR SERVICING THIS PRODUCT.

APV®

UK

SPXFLOW

Declaration of Conformity
for Valves and Valve Manifolds

SPX FLOW Technology Rosista GmbH, Gottlieb-Daimler-Str. 13, D-59439 Holzwickede
herewith declares that the

APV double seal and double seat valves of the series
SD4, SDT4, SDU4, SDMS4, SDMSU4, SDTMS4, SWcip4, DSV,
DA3, DA3SLD, DE3, DEU3, DET3, DKR2, DKRT2, DKRH2
in the nominal diameters DN 25 - 150, ISO 1“ – 6“ and 1 Sh5 - 6 Sh5

APV butterfly valves of the series SV1 and SVS1F, SVL and SVSL
in the nominal diameters DN 25 - 100, DN 125 - 250 and ISO 1“ – 4“

APV ball valves of the series KHI, KHV
in the nominal diameters DN 15 - 100

APV single seat, diaphragm and spring loaded valves of the series
S2, SW4, SWhp4, SW4DPF, SWmini4, SWT4, SWS4, MF4, MS4, MSP4, AP/T1, CPV,
RG4, RG4DPF, RGMS4, RGE4, RGE4DPF, RGEMS4, PR2, PRD2, SI2, UF/R3, VRA/H
in the nominal diameters DN 10 - 150, ISO 1/2“ – 4“ and 1 Sh5 - 6 Sh5

and the valve manifolds installed thereof

meet the requirements of the Directives 2006/42/EC (superseding 89/392/EEC
and 98/37/EC) and ProdSG (superseding GPSG - 9.GPSGV).

For official inspections, SPX FLOW Technology Rosista GmbH presents
a technical documentation according to Appendix VII of the Machinery Directive,
this documentation consisting of documents of the development and construction,
description of measures taken to meet the conformity and to correspond with
the basic requirements on safety and health, incl. an analysis of the risks,
as well as an operating manual with safety instructions.

The conformity of the valves and valve manifolds is guaranteed.

Authorised person for the documentation:
SPX FLOW Technology Rosista GmbH, Frank Baumbach,
Gottlieb-Daimler-Str. 13, D-59439 Holzwickede

January 2017

ppa. Baumbach

Manager Research and Development

APV®

Content

		Page
1.	**General Terms**	**2**
2.	**Safety Instructions**	**3 - 4**
3.	**Intended Use**	**6**
4.	**Mode of Operation**	
4.1.	General terms	
5.	**Auxiliary Equipment**	
6.	**Cleaning**	**8**
7.	**Installation**	**10 - 11**
7.1.	Welding instructions	
8.	**Dimensions / Weights**	**12**
9.	**Technical Data**	**13**
9.1.	General terms	
9.2.	Compressed air quality	
10.	**Maintenance**	
10.2	Assembly tool	4 - 15
11.	**Service Instructions**	**16 - 19**
11.1.	Dismantling from line system	
11.2.	Dismantling of wear parts (product-wetted parts)	
11.3.	Assembly of spring cylinder	
11.4.	Installation of seals and assembly of valve	
11.5.	Installation of valve	
12.	**Installation of seat seal**	**20**
12.1.	Installation of seat seal in valve shaft	
13.	**Trouble Shooting**	**21**
14.	**Spare parts lists**	**22**

UF3, UFE3, UFR3, UFRE3

I. spring cylinder, II. spring cylinder with seat lift actuator DN & Inch RN 01.054.53

UF3, UFE3, UFR3, UFRE3 - 3A design

I. spring cylinder, II. spring cylinder with seat lift actuator DN & Inch RN 01.054.574

1. General Terms

This instruction manual must be read and observed by the responsible operating and maintenance personnel.

We point out that we will not accept any liability for damage or malfunctions resulting from the non-compliance with this instruction manual.

Descriptions and data given herein are subject to technical changes.

2. Safety Instructions

Danger!
The technical safety symbol draws your attention to important directions for operating safety. You will find it wherever the activities described are bearing health hazards or risks for persons or material assets.

- Separate electric and pneumatic connections.

- Before any maintenance work the line system must be depressurized and drained if possible.

- Observe the following Service Instructions to ensure safe maintenance of the valve.

Danger!
- Do not touch the open valve or yoke!
  Risk of injury due to sudden valve operation.
  Risk of injury in dismantled valve state due to sudden valve operation.

- Regular maintenance including the replacement of all seals and bearing bushes must be scheduled in order to prevent leakages and discharge of liquids.

- The valve must only be assembbled, operated, disassembled and maintained by persons who have been trained accordingly.
  If necessary, contact your local SPX FLOW representative.

2. Safety Instructions

Danger!
Welded actuators are preloaded by spring force.

Opening of the actuators is strictly forbidden.
Danger to life!

Actuators which are no longer used or defective must be diposed in professional manner.

Defective actuators must be returned to your SPX FLOW representative for their professional disposal and free of charge for you.

Please address to your local SPX FLOW representative.

3. Intended Use

The intended use as field of application of the DELTA DELTA UF3 relief valve is to prevent the max. product pressure from being exceeded or to discharge a certain product quantity.

Attention:
In the sense of the Pressure Equipment Directive 2014/68/EU, the DELTA UF3/UFR3 relief valve is a "pressure-retaining component" and is not a "component with safety function", i.e. the valve **must not** be used as safety valve.

Its use is permissible only within the admissible pressure and temperature margins and under consideration of chemical and corrosive influences.
Any use exceeding the margins and specifications set forth, is considered to be not intended.
Any damage resulting therefrom is not within the responsibility of the manufacturer.
The user will bear the full risk.

Attention!
Improper use of the valve leads to:

- damage
- leakage
- destruction.

Failures in the production process are possible.

Arbitrary, constructive changes at the valve will influence safety as well as the intended functionality of the valve and are **not** permissible.

Authorizations and External Evaluations
ATEX (Directive 2014/34/EU)
3-A Sanitary Standards, Inc.

4. Mode of Operation

APV DELTA UF3/ UFR3
relief valve

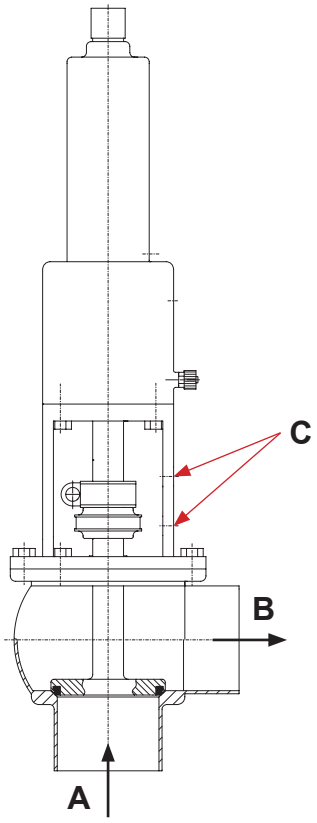

4.1. General terms

The valve has been developed for use in the brewing and beverage, dairy and food industries as well as for chemical and pharmaceutical applications.

The valves are designed for universal applications and stand out for their increased mechanical reliability and absolute ease of service.

The APV UF3/UFR3 relief valve is used to prevent a desired product pressure from being exceeded due to process requirements or to discharge a certain product quantity.

If the preset opening pressure is exceeded, the valve is opened automatically by the imminent line pressure in the supply line **(A)** under the valve seat. The liquid is drained via the discharge line **(B)**. If the adjusted set value falls short, the valve is closed by spring force.

The flow direction is always from A ⟶ B.

Attention:
In the sense of the Pressure Equipment Directive 2014/68/EU, the DELTA UF3/UFR3 relief valve is a "pressure-retaining component" and is not a "component with safety function", i.e. the valve **must not** be used as safety valve.

Proximity switches to signal the valve position can be installed in the yoke area **(C)**.

5. Auxiliary Equipment

fig. 5.1.

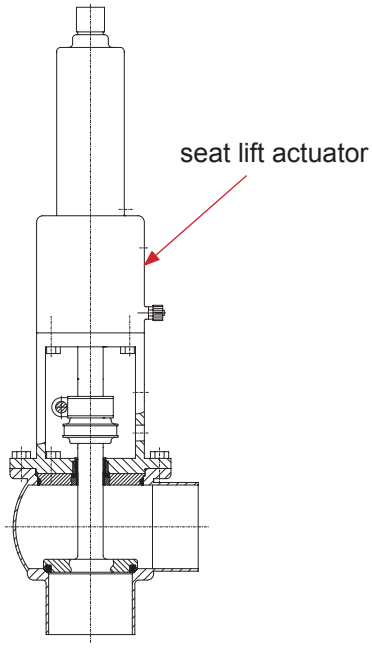

5.1. Seat lift actuator (fig. 5.1)
The UF3 valve can be equipped with a seat lift cylinder if required for cleaning technical reasons. (see chapter 6.)

5.2. Valve position indication
For the valve position indication, proximity switches can be installed in the yoke area.
We recommend to use our APV standard types:
Operating distance: 5mm / Diameter: 11mm.
If the customer decides to use a valve position indication other than APV type, we cannot take over any guarantee for a faultless function.

5.3. Valve seat variants (fig. 5.3.)
Valve seat in flat and conical design, for special requirements, are available. Through the use of a valve seat with regulating cone, the flow behaviour at low flow quantities is improved and a "softer" valve closing is achieved.
The valve variant is called "UFR3".

5.4. Housing configurations (fig. 5.4.)
Different housing shapes can be applied to reduce dead spaces to a minimum.

fig. 5.3.

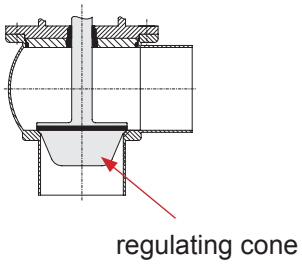

* The spring cylinder is available with scale and hand wheel to allow for a simple adjustment of the response pressure **(fig. 5.5.)**.

* As a special version, the pressure relief valves are available in aseptic design (with flat diaphragm or metal bellow).

\- Deviations from the standard spare parts lists result. These special drawings and spare parts lists will be supplied separately.

\-

fig. 5.4.

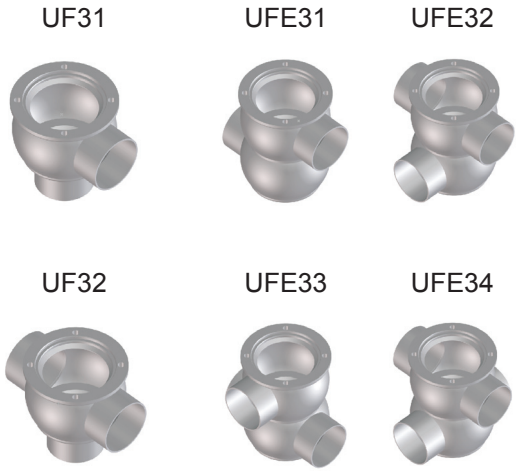

fig. 5.5.

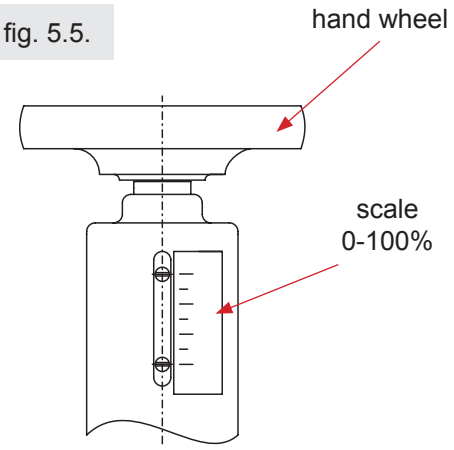

6. Cleaning

fig. 6.1.

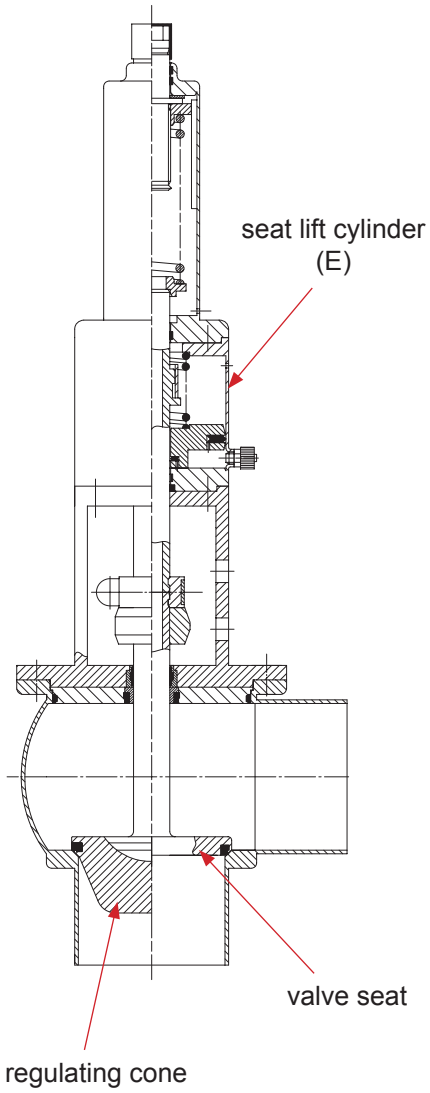

Optimum cleaning is given if the seat lift actuator (E) drives the valve seat into the position “on” during the cleaning process (fig. 6.1).

During this process, the cleaning liquid can flush the seal surfaces.

After termination of the cleaning step, the seat lift actuator is vented and the valve seat moves into "closed" position by spring force.

6.1. The flow chambers

The passages of the valve are cleaned by the cleaning liquid during cleaning of the connected pipelines.

Depending on the degree and substances of soiling, cleaning liquids, times and processes must be scheduled for the individual application.

The compatibility of the individually selected cleaning processes and liquids with the respective seal material must be verified.

7. Installation

7.1. General terms

Installation has to be done in such a way that liquids can drain off the valve housing. Vertical position is preferred.

Valves can be welded direct into the pipeline (valve insert completely dismantable).

- After the installation, the set value must be adjusted by a pressure gauge.

Adjustment:	turn right	=	pressure increase
	turn left	=	pressure reduction

If required, the value can be corrected during production by turning the adjusting screw at the spring cylinder.

Attention! Observe Welding Instructions 7.2.

7.2. Welding Instructions

- Before welding of the valve, the valve insert must be dismantled from the housing. Careful handling to avoid damage to the parts is necessary.
- Welding should only be carried out by certified welders (DIN EN ISO 9606-1). (Seam quality DIN EN ISO 5817).
- The welding of the valve housings must be undertaken in such a way that the valve body is not deformed.
- The preparation of the weld seam up to 3 mm thickness must be carried out as a square butt joint without air.
  (Consider shrinkage!)
- TIG orbital welding is best!
- After welding of the valve housings or of the mating flanges and after work at the pipelines, the corresponding parts of the installation or pipelines must be cleaned from welding residues and soiling.
  If these cleaning instructions are not observed, welding residues and dirt particles can settle in the valve and cause damage.
- Any damage resulting from the non-observance of these welding instructions is not subject to our guarantee.

8. Dimensions / Weights

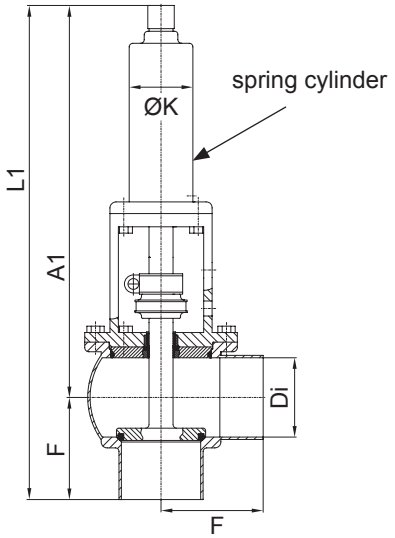

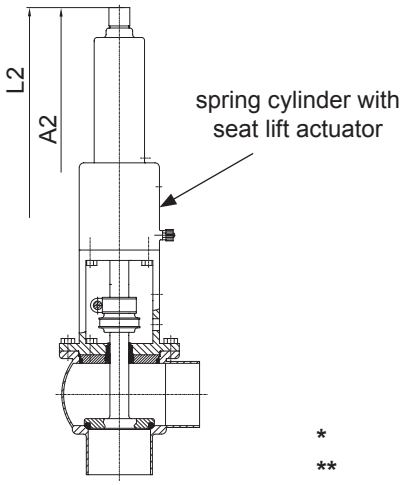

* **without/with regulating cone**
** **weight without/with regulating cone**
*** **dimensions without/with reg. cone**

		*		***					***			**	
		Pressure range (bar)		A1	A2	Ø Di		F	L1	L2	Ø K	Weight in kg	
DN	Inch	flat	cone	with-out	with	DN	Inch		with-out	with		with-out	with
25	1"	0-6,8	0-5,4	310	395	26	22,2	50	360	445	53	2,4	4,9
25	1"	0-10,0	0-10,0	353	438	26	22,2	50	403	488	53	2,6	5,1
40	1,5"	0-3,5	0-2,9	316	401	38	34,9	67	383	468	53	3,3	5,8
40	1,5"	0-7,5	0-6,3	359	444	38	34,9	67	426	511	53	3,5	6,0
40	1,5"	0-10,0	0-10,0	389	474	38	34,9	67	456	541	85	5,6	8,1
50	2"	0-2,1	0-1,8	322	407	50	47,6	72	394	479	53	3,8	6,3
50	2"	0-4,5	0-4,0	365	450	50	47,6	72	437	522	53	4,0	6,5
50	2"	0-10,0	0-10,0	395	480	50	47,6	72	467	552	85	6,1	8,6
65	2,5"	0-1,2	0-1,1	330	415	66	60,3	85	415	500	53	5,2	7,7
65	2,5"	0-2,7	0-2,4	373	458	66	60,3	85	458	543	53	5,4	7,9
65	2,5"	0-7,6	0-7,0	403	488	66	60,3	85	488	573	85	7,5	10,0
65	2,5"	0-10,0	0-10,0	451	536	66	60,3	85	536	621	85	8,0	10,5
	3"	0-1,1	0-1,0	333	418		72,9	90	423	508	53	6,6	9,1
	3"	0-2,3	0-2,1	376	461		72,9	90	466	551	53	6,8	9,3
	3"	0-6,5	0-6,0	406	491		72,9	90	496	581	85	8,8	11,3
	3"	0-10,0	0-10,0	454	539		72,9	90	544	629	85	9,3	11,8
80		0-0,9	0-08	338	423	81		98	436	521	53	6,7	9,2
80		0-1,8	0-1,7	381	466	81		98	479	564	53	6,9	9,4
80		0-5,2	0-4,8	411	496	81		98	509	594	85	9,0	11,5
80		0-10,0	0-10,0	459	544	81		98	557	642	85	9,5	12,6
100	4"	0-0,6	0-0,5	347	432	100	97,6	111	458	543	53	8,5	11,0
100	4"	0-1,2	0-1,1	390	475	100	97,6	111	501	586	53	8,7	11,2
100	4"	0-3,5	0-3,2	420	505	100	97,6	111	531	616	85	10,8	13,3
100	4"	0-8,3	0-7,7	468	553	100	97,6	111	579	664	85	11,3	13,8

9. Technical Data

9.1. General data

- Product-wetted parts:	1.4404 (DIN EN 10088)
- Other parts:	1.4301 (DIN EN 10088)
- Seals: standard design	EPDM
- option:	HNBR, VMQ, FPM
- max. line pressure	10 bar or acc. to drawing data
- max. operating temperature:	135°C EPDM, HNBR *FPM, *VMQ
- short-term load:	140°C EPDM, HNBR *FPM, *VMQ *(no steam)
- air connection (for hose):	6 x 1mm
- control pressure for seat lift actuator:	10 bar max. / 6 bar min.

Depending on the size of the spring cylinder, the response pressure can be adjusted variably or up to max. 10 bar. (or according to drawing data)

- The minimum response pressure can be > 0 bar depending on the valve mounting position and the friction of the shaft seal.

Use dry and clean control air only!

9.2. Compressed air quality

- Compressed air quality:	quality class according to ISO 8573-1
- Content of solid particles:	quality class 3, max. number of particles per m³ 10000 of 0,5 µm < d ≤ 1,0 µm 500 of 1,0 µm < d ≤ 5,0 µm
- Content of water:	quality class 4, max. dew point temperature +3 °C For installations at lower temperatures or at higher altitudes, additional measures must be considered to reduce the pressure dew point accordingly.
- Content of oil:	quality class 1, max. 0,01 mg/m³

The oil applied must be compatible with Polyurethane elastomer materials.

10. Maintenance

The maintenance intervals depend on the corresponding application and are to be determined by the operator himself carrying out temporary checks.

The valve must not be cleaned with products containing abrasive or polishing material. Especially the valve shaft must not, under any circumstances, be cleaned with such agents. Damage of the valve shaft can lead to leakages.

Exchange of seals is done according to Service Instructions. Customer stock keeping of spare seals is recommended. For valve service actions we supply complete seal kits including seal grease (see spare parts lists).

Attention! Use food-grade grease and special greases being suited for the respective seal material, only!

Recommendation:
APV assembly grease for EPDM, FPM, HNBR and NBR
(0,75 kg/tin - ref.-No. 000 70-01-019/93; H147382)
(60 g/tube - ref.-No. 000 70-01-018/93; H147381)
or
APV assembly grease for VMQ (Silicone)
(0,6 kg/tin - ref.-No. 000 70-01-017/93; H147380)
(60 g/tube - ref.-No. 000 70-01-016/93; H147379)

! Do not use grease containing mineral oil for EPDM seals.

! Do not use Silicone-based grease for VMQ seals.

Less suited grease types can influence function and service life.

.11. Service Instructions

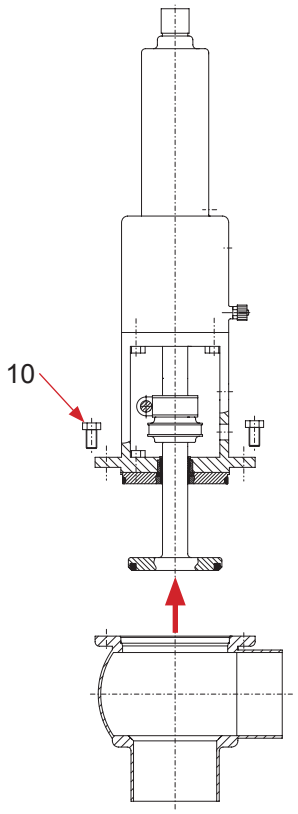

Corresponding spare parts list:
DN design / Inch design: RN 01.053.53
DN design / Inch design: RN 01.054.574 (3A version)

11.1. Dismantling from the line system

1. Shut off line pressure in the product line and drain lines if possible.
2. Remove pneumatic air lines (seat lift actuator).
3. Release clamp screw at the feedback support and extract proximity switches. (If valve is not equipped with feedback, omit 11.1.3).
4. Remove flange screws (10).
5. Screw two flange screws into the threaded bores of the valve yoke, slightly lifting the complete valve insert.
6. Remove the flange screws and carefully lift the valve insert vertically out of the valve housing.

11. Service Instructions

UF3 - without seat lift actuator

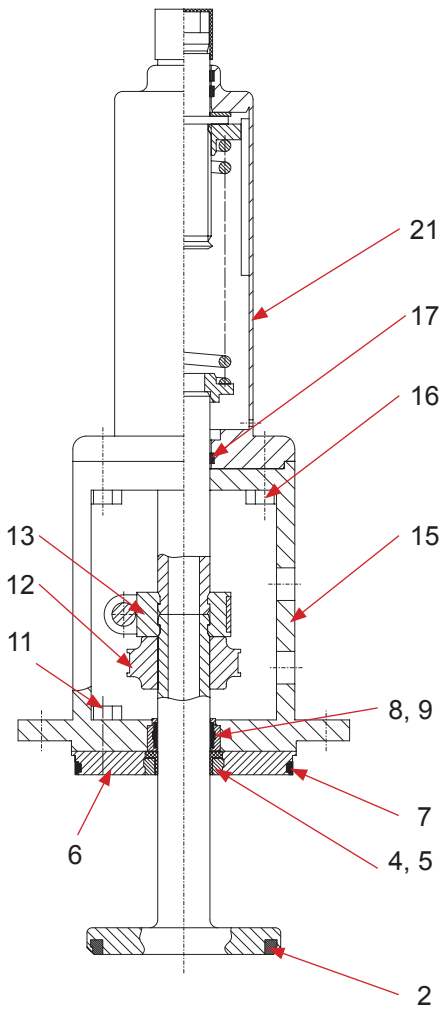

11.2. Dismantling of wear parts (product-wetted parts)

1. Remove housing screws (7) from housing cover (6).
2. Release screw of coupling (13) and dismantle.
3. Take the valve shaft (3) from the housing cover, simultaneously removing the operating cam (12) and the intermediate piece (14) of the UF valve without seat lift actuator.
4. Prick into the seat seal (2) with a peak object and carefully take it out of the groove.
5. Release screw (11). This is to position the housing cover. Remove the housing cover (6) and take out the two seal parts (4, 5).
6. Press the guide ring (8) out of the yoke flange.
7. Take the guide bush (9) out of the guide ring.
8. Remove the screws (16) and separate the complete spring cylinder(21) from the yoke (15).
9. UF3 with seat lift actuator: remove the O-ring (19).
   UF3 without seat lift actuator: remove the guide band (17).

11.3. Assembly of spring cylinder

1. UF3 with seat lift actuator: insert the O - ring (19).
   UF3 without seat lift actuator: insert the guide band (17).

11. Service Instructions

11.4. Installation of seals and assembly of valve

1. Fasten the spring cylinder (21) at the yoke (15) by the screws (16).

2. Insert the guide bush (9) in the guide ring (8) and press the complete unit into the yoke flange.

3. Insert the greased seal parts (4, 5) into the groove of the housing cover.

4. Screw the housing cover (6) to the yoke (15) by the hexagon screws (11).

5. Before installing the valve shaft, insert the seat seal (2).

* UF3 valve without regulating cone - use assembly tool for seat seal (2).

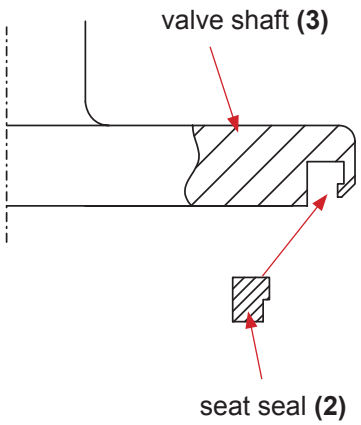

* UF3 valve with regulating cone - install seal as follows:
Press the slightly greased seal at four spots, the wide side to the front and the graduation to the top, into the groove. Introduce the seal, at the four protuding loops, e.g. by a thin, dull screwdriver into the groove and insert it by strong thumb pressure. Proceed alternately at the four loops to get an even fit of the seal. Finally, flatten the seal by strong pressure, e.g. by the handle of a screwdriver and prick the blade of a small screwdriver between the groove edge and the inner side of the seal down to the groove ground to vent the groove.
Check the even fit of the seal after the installation.

6. UF3 valve without seat lift actuator - press the intermediate piece (14) from the bottom into the spring cylinder (21).

7. Slide the shaft (3) carefully through the housing cover (6).

8. Attach the operating cam (12) on the valve shaft (3).

9. Push the valve shaft against the intermediate piece and connect both shaft ends with the coupling clamp (13).

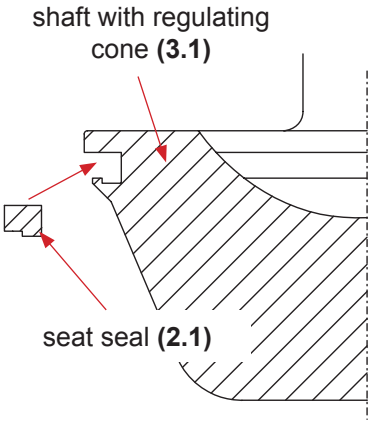

Attention: The distance tube must be between the two coupling halves when tightening the screws. The coupling screw must not slew into the feedback area.

10. Check the firm fit of the adjusting screw (11).

11. Insert the slightly greased housing seal (7) into the groove of the housing cover (6).

11. Service Instructions

11.5. Installation of valve

1. Place the complete valve insert carefully into the valve housing (1).
2. Enter the screws (10) and tighten them crosswise.
3. UF3 valve with seat lift actuator: mount the pneumatic air lines.
4. Installation of valve feedback.

basic adjustment:	Push the proximity switch into the holder with a 2 mm distance to the operating cam (12)
fine adjustment:	By slightly displacing the switch, the shift point can be adjusted more precisely if necessary. Observe the luminous diode at the switch during this adjustment.

Fix the switch by the clamp screw.

12. Installation of Seat Seal

12.1. Installation of seat seal (2) in valve shaft

fig. 12.1.

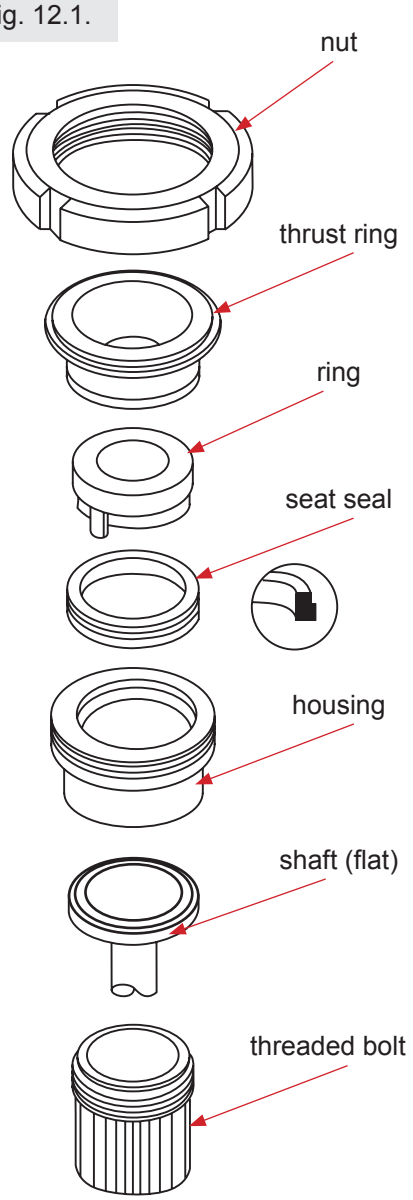

The assembly tool (fig. 12.1) consists of:

- nut
- thrust ring
- ring with venting nose
- housing
- threaded bolt

1. Insert the valve shaft into the housing in such a way that the seal groove is in the housing.
2. Clamp the shaft into the housing by means of the threaded bolt.
3. Slightly grease the seat seal with APV assembly grease. Then install the seal on the ring with the venting nose until it stops.
4. Introduce the ring with the installed seat seal into the housing and press it down until it stops sensibly.
5. Insert the thrust ring into the housing. Screw on the nut and tighten it with a hook spanner until it stops.
6. Release the nut. Take ring and thrust ring off the housing.
7. Take housing out of the vice, take off the threaded bolt. Detach the valve shaft from the housing.

Check the even fit of the seat seal.

Attention:
The tool is not suited for the installation of seals in valve shafts of UFR valves with regulating cone.

To simplify the installation of the seat seal, the following assembly tools are available:

Assembly tool for seat seal			
DN	**Inch**	**Reference number**	**ID number**
25	1"	000 51-13-110/17	H179465
40	1,5"	000 51-13-111/17	H179466
50	2"	000 51-13-112/17	H179467
	2,5"	000 51-13-12017	H179468
65		000 51-13-113/17	H179469
	3"	000 51-13-121/17	H179470
80		000 51-13-114/17	H179471
100	4"	000 51-13-115/17	H179472

13. Trouble Shooting

Failure	Remedy
Valve closed	
Leakage at discharge side	Replace seat seal **(2, 2.1)**. Check line pressure **(max. 10 bar)**.
	Check control of seat lift actuator.
Leakage between housing and yoke flange	Check housing seal **(7)** and shaft seal **(4, 5)**, replace damaged seals.
Leakage at valve shaft	Replace shaft seal **(4, 5)**.
Spring cylinder	
Correction at spring cylinder is not possible.	Replace complete spring cylinder **(21)**.
Seat lift actuator	
Seat lift actuator does not work (air escapes permanently from the shaft rod).	Replace o-ring **(19)**.
Seat lift actuator does not work (air escapes permanently from the vent bore).	Replace complete spring cylinder. Do not open cylinder by force. Spring force!
Valve position indication	
No feedback.	Carry out fine adjustment.

14. Spare Parts Lists

The reference numbers of the spare parts for the different valve designs and sizes are included in the attached spare parts drawings with corresponding lists.

Please indicate the following data to place an order for spare parts:

- number of required parts
- reference number
- designation

subject to change

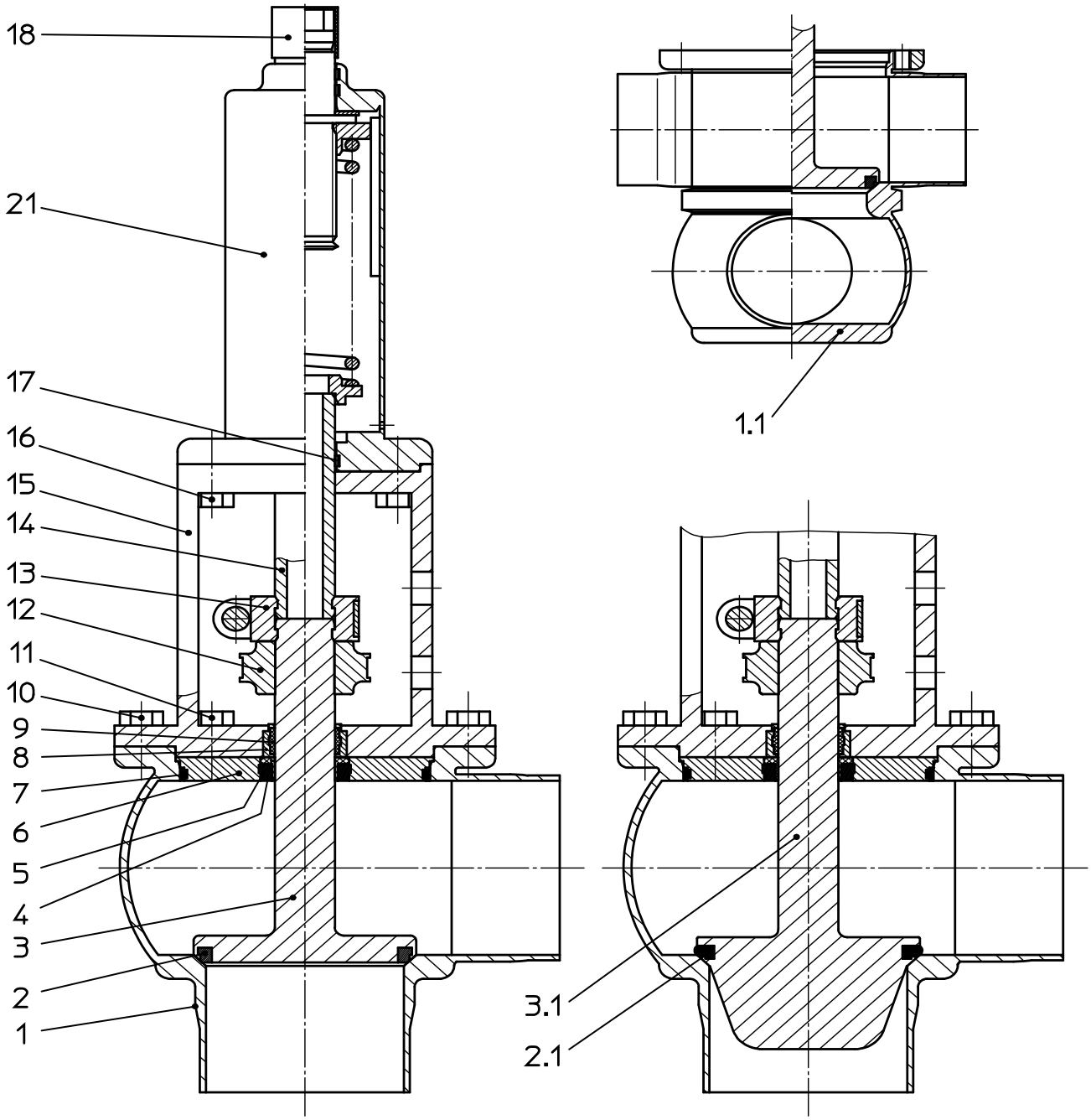

Datum:	14.0714									
Name:	Trytko									
Geprüft:										

Ersatzteilliste: spare parts list

Uberströmventil / Relief valve UF3, UFE3, UFR3, UFRE3
Ausführungen: I. Federzylinder und II. Federzylinder mit Anlüftzylinder
Designs: I. spring cylinder and II. spring cylinder with seat lift actuator
DN 25-100 ; 1-4 zoll / inch

APV

SPX Flow Technology Rosista GmbH
D-59425 Unna Germany

Blatt 1 von 10

RN 01.054.53

Weitergabe sowie Vervielfältigung dieser Unterlage, Verwertung und Mitteilung ihres Inhalts nicht gestattet, soweit nicht schriftlich zugestanden. Verstoß verpflichtet zum Schadensersatz und kann strafrechtliche Folgen haben (Paragraph 18 UWG, Paragraph 106 UrhG). Eigentum und alle Rechte, auch für Patenterteilung und Gebrauchsmustereintragung, vorbehalten. SPX Flow Technology Rosista GmbH.

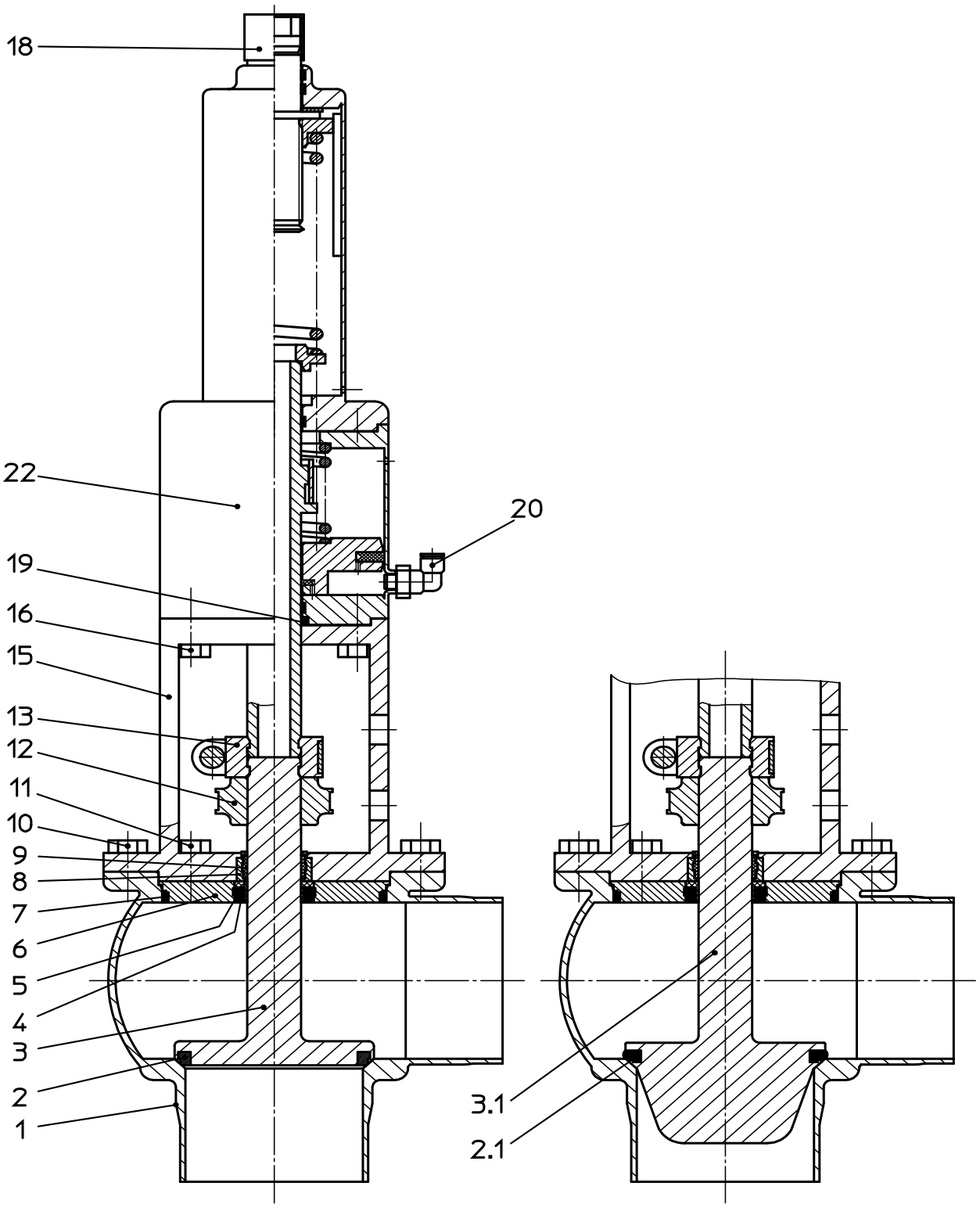

Datum:	14.0714									
Name:	Trytko									
Geprüft:										

Ersatzteilliste: spare parts list

Uberströmventil / Relief valve UF3, UFE3, UFR3, UFRE3
Ausführungen: I. Federzylinder und II. Federzylinder mit Anlüftzylinder
Designs: I. spring cylinder and II. spring cylinder with seat lift actuator
DN 25-100 ; 1-4 zoll / inch

APV

SPX Flow Technology Rosista GmbH
D-59425 Unna Germany

Blatt 2 von 10

RN 01.054.53

Weitergabe sowie Vervielfältigung dieser Unterlage, Verwertung und Mitteilung ihres Inhalts nicht gestattet, soweit nicht schriftlich zugestanden. Verstoß verpflichtet zum Schadensersatz und kann strafrechtliche Folgen haben (Paragraph 18 UWG, Paragraph 106 UrhG). Eigentum und alle Rechte, auch für Patenterteilung und Gebrauchsmustereintragung, vorbehalten. SPX Flow Technology Rosista GmbH.

Weitergabe sowie Vervielfältigung dieser Unterlage, Verwertung und Mitteilung ihres Inhalts nicht gestattet, soweit nicht schriftlich zugestanden. Verstoß verpflichtet zum Schadensersatz und kann strafrechtliche Folgen haben (Paragraph 18 UWG, Paragraph 106 UrhG). Eigentum und alle Rechte, auch für Patenterteilung und Gebrauchsmustereintragung, vorbehalten. SPX Flow Technology Rosista GmbH.

Ersatzteilliste: spare parts list

Überströmventil / Relief valve UF3, UFE3, UFR3, UFRE3
Ausführungen: I. Federzylinder und II. Federzylinder mit Anlüftzylinder
Designs: I. spring cylinder and II. spring cylinder with seat lift actuator
DN 25-100 ; 1-4 zoll / inch

Datum:	14.0714				
Name:	Trytko				
Geprüft:					
Datum:					
Name:					
Geprüft:					

APV
SPX Flow Technology Rosista GmbH
D-59425 Unna Germany

RN 01.054.53

pos. item	Menge quantity	Beschreibung description	Material material	DN25 WS-Nr. ref.-no.	1" WS-Nr. ref.-no.	DN40 WS-Nr. ref.-no.	1,5" WS-Nr. ref.-no.	DN50 WS-Nr. ref.-no.	2" WS-Nr. ref.-no.
1	1	Gehäuse UF31 1+2S Housing	1.4404	15-41-276/47 H34161	15-41-324/47 H34176	15-41-376/47 H34180	15-41-424/47 H34196	15-41-426/47 H34200	15-41-474/47 H34221
	1	Gehäuse UF32 1+2+3S Housing	1.4404	15-42-276/47 H34341	15-42-313/47 H34351	15-42-376/47 H34354	15-42-413/47 H34360	15-42-426/47 H34363	15-42-463/47 H34370
1.1	1	Gehäuse UFE31 1+2S Housing	1.4404	15-46-276/47 H34631	15-46-313/47 H34634	15-46-376/47 H34636	15-46-413/47 H34639	15-46-426/47 H34641	15-46-463/47 H34645
	1	Gehäuse UFE32 1+2+3S Housing	1.4404	15-47-276/47 H34680	15-47-313/47 H34682	15-47-376/47 H34684	15-47-413/47 H34686	15-47-426/47 H34688	15-47-463/47 H34690
	1	Gehäuse UFE33 1+2+3S Housing	1.4404	15-48-276/47 H34710	15-48-313/47 H34712	15-48-376/47 H34714	15-48-413/47 H34716	15-48-426/47 H34718	15-48-463/47 H34720
	1	Gehäuse UFE34 1+2+3+4S Housing	1.4404	15-49-276/47 H34751	15-49-313/47 H34753	15-49-376/47 H34755	15-49-413/47 H34757	15-49-426/47 H34759	15-49-463/47 H34761
2	1	Tellerdichtung Seat seal	EPDM FDA-konform	58-33-293/93 H77442		58-33-393/93 H77467		58-33-443/93 H77491	
	1	Tellerdichtung Seat seal	FPM FDA-konform	58-33-293/73 H77441		58-33-393/73 H77466		58-33-443/73 H77490	
	1	Tellerdichtung Seat seal	HNBR FDA-konform	58-33-293/33 H170176		58-33-393/33 H166676		58-33-443/33 H166085	
	1	Tellerdichtung Seat seal	VMQ FDA-konform	58-33-293/13 H77440		58-33-393/13 H77465		58-33-443/13 H77489	
2.1	1	Tellerdichtung Seat seal	EPDM FDA-konform	58-33-294/93 H77445		58-33-394/93 H77470		58-33-444/93 H77494	
	1	Tellerdichtung Seat seal	FPM FDA-konform	58-33-294/73 H77444		58-33-394/73 H77469		58-33-444/73 H77493	
	1	Tellerdichtung Seat seal	HNBR FDA-konform	58-33-294/33 H172173		58-33-394/33 H172175		58-33-444/33 H165709	
	1	Tellerdichtung Seat seal	VMQ FDA-konform	58-33-294/13 H77443		58-33-394/13 H77468		58-33-444/13 H77492	
3	1	Schaft UF3 Shaft	1.4404	15-22-284/42 H30078	15-22-170/42 H105422	15-22-384/42 H30162	15-22-417/42 H30207	15-22-434/42 H30231	15-22-467/42 H30290
3.1	1	Schaft mit Regelkegel UFR3 Shaft with control cone	1.4404	15-22-150/42 H29982	15-22-171/42 H105424	15-22-151/42 H29983	15-22-164/42 H140321	15-22152/42 H29985	15-22-165/42 H29993

Weitergabe sowie Vervielfältigung dieser Unterlage, Verwertung und Mitteilung ihres Inhalts nicht gestattet, soweit nicht schriftlich zugestanden. Verstoß verpflichtet zum Schadensersatz und kann strafrechtliche Folgen haben (Paragraph 18 UWG, Paragraph 106 UrhG). Eigentum und alle Rechte, auch für Patenterteilung und Gebrauchsmustereintragung, vorbehalten. SPX Flow Technology Rosista GmbH.

Ersatzteilliste: spare parts list

Überströmventil / Relief valve UF3, UFE3, UFR3, UFRE3
Ausführungen: I. Federzylinder und II. Federzylinder mit Anlüftzylinder
Designs: I. spring cylinder and II. spring cylinder with seat lift actuator
DN 25-100 ; 1-4 zoll / inch

Datum:	14.0714			
Name:	Trytko			
Geprüft:				
Datum:				
Name:				
Geprüft:				

APV
SPX Flow Technology Rosista GmbH
D-59425 Unna Germany

Blatt 4 von 10

RN 01.054.53

pos. item	Menge quantity	Beschreibung description	Material material	DN25 WS-Nr. ref.-no.	1" WS-Nr. ref.-no.	DN40 WS-Nr. ref.-no.	1,5" WS-Nr. ref.-no.	DN50 WS-Nr. ref.-no.	2" WS-Nr. ref.-no.
4	1	Schaftdichtung Shaft seal	Turcon MF6	3A0 58-33-151/24 H323082					
5	1	Tellerdichtung Seat seal	EPDM FDA-konform	58-33-293/93 H77442					
	1	Tellerdichtung Seat seal	FPM FDA-konform	58-33-293/73 H77441					
	1	Tellerdichtung Seat seal	HNBR FDA-konform	58-33-293/33 H170176					
	1	Tellerdichtung Seat seal	VMQ FDA-konform	58-33-293/13 H77440					
6	1	Gehäusedeckel Housing cover	1.4404	15-00-065/42 H156869		15-00-069/42 H156409		15-00-793/42 H148194	
7	1	Gehäusedichtung Housing seal	EPDM FDA-konform	58-33-292/93 H77439		58-33-392/93 H77464		58-33-442/93 H77488	
	1	Gehäusedichtung Housing seal	HNBR FDA-konform	58-33-292/33 H170017		58-33-392/33 H170018		58-33-442/33 H168714	
	1	Gehäusedichtung Housing seal	FPM FDA-konform	58-33-292/73 H77438		58-33-392/73 H77463		58-33-442/73 H77487	
8	1	Führungsbuchse Bushing	1.4301	08-01-181/12 H148192					
9	1	Führungsbuchse Bushing	PTFE + 25% Kohle	08-01-178/23 H207154					
10	4	Skt. Schraube Hex. screw DIN EN 24017-A2-70	1.4301	65-01-081/15 M8x16 H78772					
11	1	Skt. Schraube Hex. screw DIN EN 24017-A2-70	1.4301	65-01-056/13 M6x16 H78751	65-01-081/15 M8x16 H78772				
12	1	Schaltnocke Operating cam	1.4301 / PA12	08-60-082/12 H16295				08-52-135/93 H165885	
13	1	Kupplung Coupling	1.4301	08-52-110/13 H15938					
14	1	Zwischenstück Intermediate piece	1.4404	09-87-084/42 H19710				09-87-085/42 H19711	

Weitergabe sowie Vervielfältigung dieser Unterlage, Verwertung und Mitteilung ihres Inhalts nicht gestattet, soweit nicht schriftlich zugestanden. Verstoß verpflichtet zum Schadensersatz und kann strafrechtliche Folgen haben (Paragraph 18 UWG, Paragraph 106 UrhG). Eigentum und alle Rechte, auch für Patenterteilung und Gebrauchsmustereintragung, vorbehalten. SPX Flow Technology Rosista GmbH.

Ersatzteilliste: spare parts list

Überströmventil / Relief valve UF3, UFE3, UFR3, UFRE3
Ausführungen: I. Federzylinder und II. Federzylinder mit Anlüftzylinder
Designs: I. spring cylinder and II. spring cylinder with seat lift actuator
DN 25-100 ; 1-4 zoll / inch

Datum:	14.0714				
Name:	Trytko				
Geprüft:					
Datum:					
Name:					
Geprüft:					

APV
SPX Flow Technology Rosista GmbH
D-59425 Unna Germany

Blatt 5 von 10

RN 01.054.53

pos. item	Menge quantity	Beschreibung description	Material material	DN25 WS-Nr. ref.-no.	1" WS-Nr. ref.-no.	DN40 WS-Nr. ref.-no.	1,5" WS-Nr. ref.-no.	DN50 WS-Nr. ref.-no.	2" WS-Nr. ref.-no.
15	1	Laterne Yoke	1.4308	16-40-091/17 H164718		16-40-385/17 H40502		16-40-435/17 H40511	
16	4	Skt. Schraube Hex. screw DIN EN 24017-A2-70	1.4301	65-01-079/15 M8x14 H78768					
17	1	Führungsband PTFE guide strap	Turcite	08-39-079/93 H14879					
18	1	Verschlußkappe Cap	PE-weich-gelb	08-60-006/93 H16219					
19	1	O-Ring O-ring 20,2x3	NBR	58-06-078/83 H76943					
20	1	W-Verschraubung Elbow connector G1/8" 6x1	1.4301/PA	08-60-750/93 H208825					
21	1	Federzylinder Spring cylinder	1.4301	je nach Druckbereich entsprechenden Federzylinder einsetzen use spring cylinder depending on required pressure range Nr.31 16-30-170/17 H39536 Nr.32 16-30-171/17 H39537 Nr.33 16-30-172/17 H39538 Nr.34 16-30-173/17 H39539					
22	1	Federzylinder mit Anlüftzylinder Spring cylinder with seat lift actuator	1.4301	je nach Druckbereich entsprechenden Federzylinder mit Anlüftzylinder einsetzen use spring cylinder with seat lift actuator depending on required pressure range Nr.31-12 16-30-180/17 H39543 Nr.32-12 16-30-182/17 H39545 Nr.33-12 16-30-184/17 H39547 Nr.31-25 16-30-181/17 H39544 Nr.32-25 16-30-183/17 H39546 Nr.33-25 16-30-185/17 H39548 Nr.34-25 16-30-186/17 H39549					

Weitergabe sowie Vervielfältigung dieser Unterlage, Verwertung und Mitteilung ihres Inhalts nicht gestattet, soweit nicht schriftlich zugestanden. Verstoß verpflichtet zum Schadensersatz und kann strafrechtliche Folgen haben (Paragraph 18 UWG, Paragraph 106 UrhG). Eigentum und alle Rechte, auch für Patenterteilung und Gebrauchsmustereintragung, vorbehalten. SPX Flow Technology Rosista GmbH.

Ersatzteilliste: spare parts list

Überströmventil / Relief valve UF3, UFE3, UFR3, UFRE3
Ausführungen: I. Federzylinder und II. Federzylinder mit Anlüftzylinder
Designs: I. spring cylinder and II. spring cylinder with seat lift actuator
DN 25-100 ; 1-4 zoll / inch

Datum:	14.0714			
Name:	Trytko			
Geprüft:				
Datum:				
Name:				
Geprüft:				

APV
SPX Flow Technology Rosista GmbH
D-59425 Unna Germany

Blatt 6 von 10

RN 01.054.53

pos. item	Menge quantity	Beschreibung description	Material material	DN25 WS-Nr. ref.-no.	1" WS-Nr. ref.-no.	DN40 WS-Nr. ref.-no.	1,5" WS-Nr. ref.-no.	DN50 WS-Nr. ref.-no.	2" WS-Nr. ref.-no.
		Dichtungssatz / seal kit UF3, UFE3 Pos. 2, 4, 5, 7, 9 nur im kompletten Dichtungssatz erhältlich / Item 2, 4, 5, 7, 9 available as complete seal kits only							
		Dichtungssatz Seal kit	FPM	58-34-438/00 H179231		58-34-439/00 H179235		58-34-440/00 H179240	
		Dichtungssatz Seal kit	EPDM	58-34-438/01 H179232		58-34-439/01 H179236		58-34-440/01 H179241	
		Dichtungssatz Seal kit	VMQ	58-34-438/02 H179233		58-34-439/02 H179237		58-34-440/02 H179243	
		Dichtungssatz Seal kit	HNBR	58-34-438/06 H179234		58-34-439/06 H179238		58-34-440/06 H179244	
		Dichtungssatz / seal kit UFR3, UFRE3 (mit Regelkegel / with control cone) Pos. 2.1, 4, 5, 7, 9 nur im kompletten Dichtungssatz erhältlich / Item 2.1, 4, 5, 7, 9 available as complete seal kits only							
		Dichtungssatz Seal kit	FPM	58-34-450/00 H179265		58-34-451/00 H179269		58-34-452/00 H179273	
		Dichtungssatz Seal kit	EPDM	58-34-450/01 H179266		58-34-451/01 H179270		58-34-452/01 H179274	
		Dichtungssatz Seal kit	VMQ	58-34-450/02 H179267		58-34-451/02 H179271		58-34-452/02 H179275	
		Dichtungssatz Seal kit	HNBR	58-34-450/06 H179268		58-34-451/06 H179272		58-34-452/06 H179276	

Weitergabe sowie Vervielfältigung dieser Unterlage, Verwertung und Mitteilung ihres Inhalts nicht gestattet, soweit nicht schriftlich zugestanden. Verstoß verpflichtet zum Schadensersatz und kann strafrechtliche Folgen haben (Paragraph 18 UWG, Paragraph 106 UrhG). Eigentum und alle Rechte, auch für Patenterteilung und Gebrauchsmustereintragung, vorbehalten. SPX Flow Technology Rosista GmbH.

Ersatzteilliste: spare parts list

Überströmventil / Relief valve UF3, UFE3, UFR3, UFRE3
Ausführungen: I. Federzylinder und II. Federzylinder mit Anlüftzylinder
Designs: I. spring cylinder and II. spring cylinder with seat lift actuator
DN 25-100 ; 1-4 zoll / inch

Datum:	14.0714				
Name:	Trytko				
Geprüft:					
Datum:					
Name:					
Geprüft:					

APV
SPX Flow Technology Rosista GmbH
D-59425 Unna Germany

Blatt 7 von 10

RN 01.054.53

pos. item	Menge quantity	Beschreibung description	Material material	DN65 WS-Nr. ref.-no.	2,5" WS-Nr. ref.-no.	3" WS-Nr. ref.-no.	DN80 WS-Nr. ref.-no.	DN100 WS-Nr. ref.-no.	4" WS-Nr. ref.-no.
1	1	Gehäuse UF31 1+2S Housing	1.4404	15-41-476/47 H34225	15-41-524/47 H34244	15-41-551/47 H34263	15-41-526/47 H34248	15-41-626/47 H34277	15-41-674/47 H34292
	1	Gehäuse UF32 1+2+3S Housing	1.4404	15-42-476/47 H34374	15-42-513/47 H34382	15-42-551/47 H34390	15-42-526/47 H34396	15-42-626/47 H34396	15-42-674/47 H34402
1.1	1	Gehäuse UFE31 1+2S Housing	1.4404	15-46-476/47 H34647	15-46-513/47 H34650	15-46-551/47 H34655	15-46-526/47 H34652	15-46-626/47 H34658	15-46-663/47 H34663
	1	Gehäuse UFE32 1+2+3S Housing	1.4404	15-47-476/47 H34692	15-47-513/47 H34694	15-47-551/47 H34698	15-47-526/47 H34696	15-47-626/47 H34700	15-47-663/47 H34703
	1	Gehäuse UFE33 1+2+3S Housing	1.4404	15-48-476/47 H34723	15-48-513/47 H34726	15-48-551/47 H34730	15-48-526/47 H34728	15-48-626/47 H34734	15-48-663/47 H34737
	1	Gehäuse UFE34 1+2+3+4S Housing	1.4404	15-49-476/47 H34764	15-49-513/47 34766	15-49-551/47 H34770	15-49-526/47 H34768	15-49-626/47 H34773	15-49-663*47 H34775
2	1	Tellerdichtung Seat seal	EPDM FDA-konform	58-33-493/93 H77515		58-33-568/93 H77561	58-33-543/93 H77546	58-33-643/93 H77586	
	1	Tellerdichtung Seat seal	FPM FDA-konform	58-33-493/73 H77514		58-33-568/73 H77560	58-33-543/73 H77545	58-33-643/73 H77785	
	1	Tellerdichtung Seat seal	HNBR FDA-konform	58-33-493/33 H166678		58-33-568/33 H166679	58-33-543/33 H166681	58-33-643/33 H166682	
	1	Tellerdichtung Seat seal	VMQ FDA-konform	58-33-493/13 H77513		58-33-568/13 H77559	58-33-543/13 H77544	58-33-643/13 H77584	
2.1	1	Tellerdichtung Seat seal	EPDM FDA-konform	58-33-494/13 H77516		58-33-569/13 H77561	58-33-544/13 H77547	58-33-644/13 H77587	
	1	Tellerdichtung Seat seal	FPM FDA-konform	58-33-494/33 H172178		58-33-569/33 H176688	58-33-544/33 H172180	58-33-644/33 H172183	
	1	Tellerdichtung Seat seal	HNBR FDA-konform	58-33-494/73 H77517		58-33-569/73 H77563	58-33-544/73 H77548	58-33-644/73 H77588	
	1	Tellerdichtung Seat seal	VMQ FDA-konform	58-33-494/93 H77518		58-33-569/93 H77564	58-33-544/93 H77549	58-33-644/93 H77589	
3	1	Schaft UF3 Shaft	1.4404	15-22-484/42 H30314	15-22-517/42 H30363	15-22-559/42 H30439	15-22-534/42 H30384	15-22-634/42 H30485	15-22-667/42 H30532
3.1	1	Schaft mit Regelkegel UFR3 Shaft with control cone	1.4404	15-22-153/42 H29986	15-22-166/42 H29995	15-22-154/42 H39988	15-22-155/42 H29990	15-22-156/42 H29991	15-22-218/42 H144652

Weitergabe sowie Vervielfältigung dieser Unterlage, Verwertung und Mitteilung ihres Inhalts nicht gestattet, soweit nicht schriftlich zugestanden. Verstoß verpflichtet zum Schadensersatz und kann strafrechtliche Folgen haben (Paragraph 18 UWG, Paragraph 106 UrhG). Eigentum und alle Rechte, auch für Patenterteilung und Gebrauchsmustereintragung, vorbehalten. SPX Flow Technology Rosista GmbH.

Ersatzteilliste: spare parts list

Überströmventil / Relief valve UF3, UFE3, UFR3, UFRE3
Ausführungen: I. Federzylinder und II. Federzylinder mit Anlüftzylinder
Designs: I. spring cylinder and II. spring cylinder with seat lift actuator
DN 25-100 ; 1-4 zoll / inch

Datum:	14.0714			
Name:	Trytko			
Geprüft:				
Datum:				
Name:				
Geprüft:				

APV
SPX Flow Technology Rosista GmbH
D-59425 Unna Germany

Blatt 8 von 10

RN 01.054.53

pos. item	Menge quantity	Beschreibung description	Material material	DN65 WS-Nr. ref.-no.	2,5" WS-Nr. ref.-no.	3" WS-Nr. ref.-no.	DN80 WS-Nr. ref.-no.	DN100 WS-Nr. ref.-no.	4" WS-Nr. ref.-no.
4	1	Schaftdichtung Shaft seal	Turcon MF6	3A0 58-33-151/24 H323082					
5	1	Tellerdichtung Seat seal	EPDM FDA-konform	58-33-293/93 H77442					
	1	Tellerdichtung Seat seal	FPM FDA-konform	58-33-293/73 H77441					
	1	Tellerdichtung Seat seal	HNBR FDA-konform	58-33-293/33 H170176					
	1	Tellerdichtung Seat seal	VMQ FDA-konform	58-33-293/13 H77440					
6	1	Gehäusedeckel Housing cover	1.4404	15-00-794/42 H151968		15-00-799/42 H159895	15-00-797/42 H156593	15-00-798/42 H159888	
7	1	Gehäusedichtung Housing seal	EPDM FDA-konform	58-33-492/93 H77512		58-33-567/93 H77558	58-33-542/93 H77543	58-33-642/93 H77583	
	1	Gehäusedichtung Housing seal	HNBR FDA-konform	58-33-492/33 H168759		58-33-567/33 H170013	58-33-542/33 H170075	58-33-642/33 H170074	
	1	Gehäusedichtung Housing seal	FPM FDA-konform	58-33-492/73 H77511		58-33-567/73 H77557	58-33-542/73 H77542	58-33-642/73 H77582	
8	1	Führungsbuchse Bushing	1.4301	08-01-179/12 H156220					
9	1	Führungsbuchse Bushing	PTFE + 25% Kohle	08-01-178/23 H207154					
10	4	Skt. Schraube Hex. screw DIN EN 24017-A2-70	1.4301	65-01-081/15 M8x16 H78772			65-01-130/15 M10x16 H78806		
11	1	Skt. Schraube Hex. screw DIN EN 24017-A2-70	1.4301	65-01-081/15 M8x16 H78772					
12	1	Schaltnocke Operating cam	1.4301 / PA12	08-52-135/93 H165885					
13	1	Kupplung Coupling	1.4301	08-52-110/13 H15938					
14	1	Zwischenstück Intermediate piece	1.4404	09-87-085/42 H19711					

Weitergabe sowie Vervielfältigung dieser Unterlage, Verwertung und Mitteilung ihres Inhalts nicht gestattet, soweit nicht schriftlich zugestanden. Verstoß verpflichtet zum Schadensersatz und kann strafrechtliche Folgen haben (Paragraph 18 UWG, Paragraph 106 UrhG). Eigentum und alle Rechte, auch für Patenterteilung und Gebrauchsmustereintragung, vorbehalten. SPX Flow Technology Rosista GmbH.

Ersatzteilliste: spare parts list

Überströmventil / Relief valve UF3, UFE3, UFR3, UFRE3
Ausführungen: I. Federzylinder und II. Federzylinder mit Anlüftzylinder
Designs: I. spring cylinder and II. spring cylinder with seat lift actuator
DN 25-100 ; 1-4 zoll / inch

Datum:	14.0714				
Name:	Trytko				
Geprüft:					
Datum:					
Name:					
Geprüft:					

APV
SPX Flow Technology Rosista GmbH
D-59425 Unna Germany

Blatt 9 von 10

RN 01.054.53

pos. item	Menge quantity	Beschreibung description	Material material	DN65 WS-Nr. ref.-no.	2,5" WS-Nr. ref.-no.	3" WS-Nr. ref.-no.	DN80 WS-Nr. ref.-no.	DN100 WS-Nr. ref.-no.	4" WS-Nr. ref.-no.
15	1	Laterne Yoke	1.4308	16-40-485/17 H40529		16-40-560/17 H40547	16-40-535/17 H40540	16-40-096/17 H179815	
16	4	Skt. Schraube DIN EN 24017-A2-70 Hex. screw	1.4301	65-01-079/15 M8x14 H78768					
17	1	Führungsband PTFE guide strap	Turcite	08-39-079/93 H14879					
18	1	Verschlußkappe Cap	PE-weich-gelb	08-60-006/93 H16219					
19	1	O-Ring 20,2x3 O-ring	NBR	58-06-078/83 H76943					
20	1	W-Verschraubung G1/8" 6x1 Elbow connector	1.4301/PA	08-60-750/93 H208825					
21	1	Federzylinder Spring cylinder	1.4301	je nach Druckbereich entsprechenden Federzylinder einsetzen use spring cylinder depending on required pressure range Nr.31 16-30-170/17 H39536 Nr.32 16-30-171/17 H39537 Nr.33 16-30-172/17 H39538 Nr.34 16-30-173/17 H39539					
22	1	Federzylinder mit Anlüftzylinder Spring cylinder with seat lift actuator	1.4301	je nach Druckbereich entsprechenden Federzylinder mit Anlüftzylinder einsetzen use spring cylinder with seat lift actuator depending on required pressure range Nr.31-12 16-30-180/17 H39543 Nr.32-12 16-30-182/17 H39545 Nr.33-12 16-30-184/17 H39547 Nr.31-25 16-30-181/17 H39544 Nr.32-25 16-30-183/17 H39546 Nr.33-25 16-30-185/17 H39548 Nr.34-25 16-30-186/17 H39549					

Weitergabe sowie Vervielfältigung dieser Unterlage, Verwertung und Mitteilung ihres Inhalts nicht gestattet, soweit nicht schriftlich zugestanden. Verstoß verpflichtet zum Schadensersatz und kann strafrechtliche Folgen haben (Paragraph 18 UWG, Paragraph 106 UrhG). Eigentum und alle Rechte, auch für Patenterteilung und Gebrauchsmustereintragung, vorbehalten. SPX Flow Technology Rosista GmbH.

Ersatzteilliste: spare parts list

Überströmventil / Relief valve UF3, UFE3, UFR3, UFRE3
Ausführungen: I. Federzylinder und II. Federzylinder mit Anlüftzylinder
Designs: I. spring cylinder and II. spring cylinder with seat lift actuator
DN 25-100 ; 1-4 zoll / inch

Datum:	14.0714			
Name:	Trytko			
Geprüft:				
Datum:				
Name:				
Geprüft:				

APV
SPX Flow Technology Rosista GmbH
D-59425 Unna Germany

Blatt 10 von 10

RN 01.054.53

pos. item	Menge quantity	Beschreibung description	Material material	DN65 WS-Nr. ref.-no.	2,5" WS-Nr. ref.-no.	3" WS-Nr. ref.-no.	DN80 WS-Nr. ref.-no.	DN100 WS-Nr. ref.-no.	4" WS-Nr. ref.-no.
		Dichtungssatz / seal kit UF3, UFE3 Pos. 2, 4, 5, 7, 9 nur im kompletten Dichtungssatz erhältlich / Item 2, 4, 5, 7, 9 available as complete seal kits only							
		Dichtungssatz Seal kit	FPM	58-34-441/00 H179245		58-34-443/00 H179261	58-34-442/00 H179251	58-34-444/00 H179257	
		Dichtungssatz Seal kit	EPDM	58-34-441/01 H179247		58-34-443/01 H179262	58-34-442/01 H179253	58-34-444/01 H179258	
		Dichtungssatz Seal kit	VMQ	58-34-441/02 H179249		58-34-443/02 H179263	58-34-442/02 H179254	58-34-444/02 H179259	
		Dichtungssatz Seal kit	HNBR	58-34-441/06 H179250		58-34-443/06 H179264	58-34-442/06 H179255	58-34-444/06 H179260	
		Dichtungssatz / seal kit UFR3, UFRE3 (mit Regelkegel / with control cone) Pos. 2.1, 4, 5, 7, 9 nur im kompletten Dichtungssatz erhältlich / Item 2.1, 4, 5, 7, 9 available as complete seal kits only							
		Dichtungssatz Seal kit	FPM	58-34-453/00 H179277		58-34-455/00 H179290	58-34-454/00 H179281	58-34-456/00 H179285	
		Dichtungssatz Seal kit	EPDM	58-34-453/01 H179278		58-34-455/01 H179291	58-34-454/01 H179282	58-34-456/01 H179286	
		Dichtungssatz Seal kit	VMQ	58-34-453/02 H179279		58-34-455/02 H179292	58-34-454/02 H179283	58-34-456/02 H179287	
		Dichtungssatz Seal kit	HNBR	58-34-453/06 H179280		58-34-455/06 H179297	58-34-454/06 H179284	58-34-456/06 H179289	

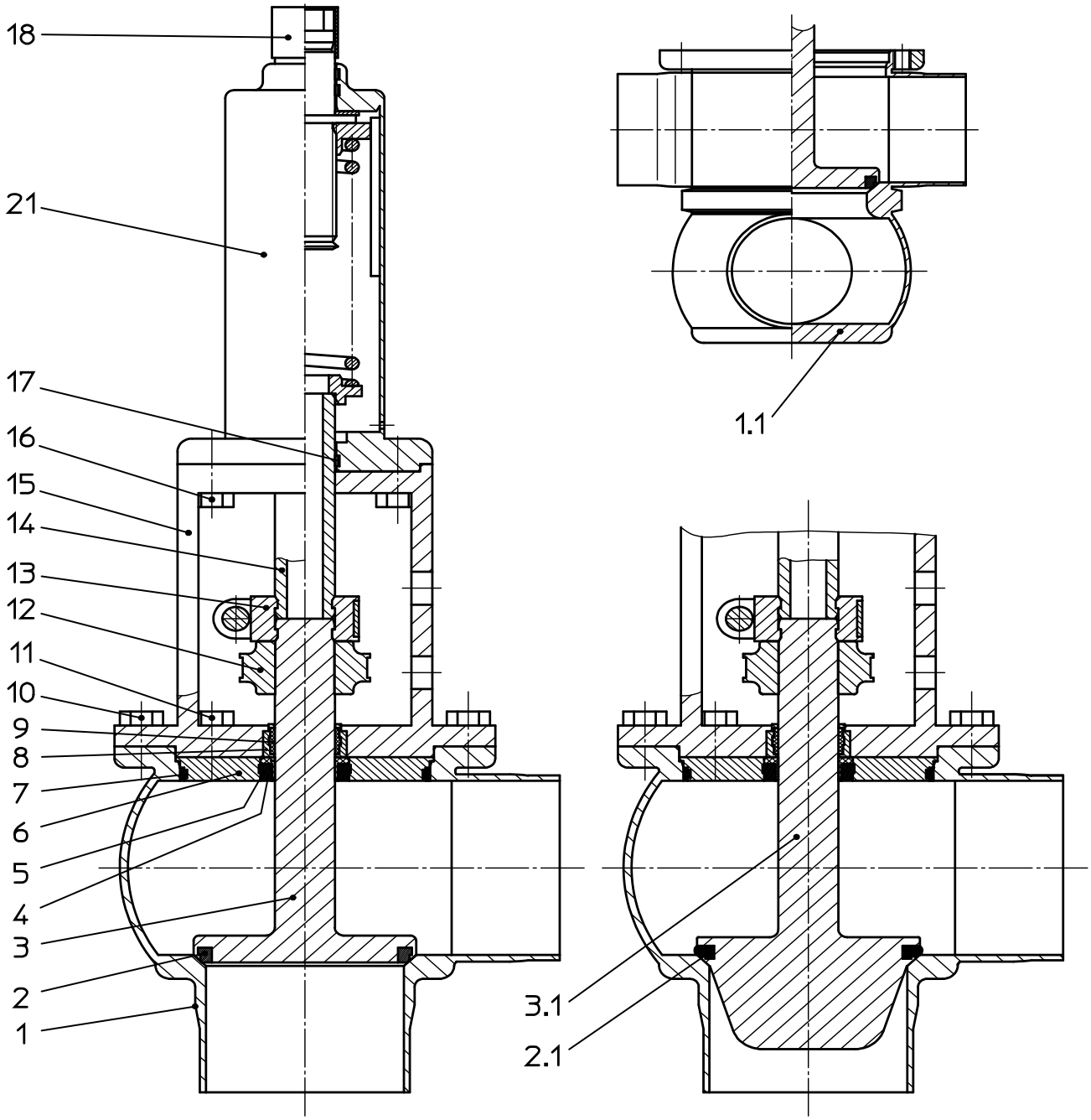

Datum:	18.0714									
Name:	Trytko									
Geprüft:										

Ersatzteilliste: spare parts list

Überströmventil / Relief valve UF3, UFE3, UFR3, UFRE3

Ausführungen: I. Federzylinder und II. Federzylinder mit Anlüftzylinder

Designs: I. spring cylinder and II. spring cylinder with seat lift actuator

1-4 zoll / inch

A3 ®

APV

SPX Flow Technology Rosista GmbH
D-59425 Unna Germany

Blatt 1 von 7

RN 01.054.574

Weitergabe sowie Vervielfältigung dieser Unterlage, Verwertung und Mitteilung ihres Inhalts nicht gestattet, soweit nicht schriftlich zugestanden. Verstoß verpflichtet zum Schadensersatz und kann strafrechtliche Folgen haben (Paragraph 18 UWG, Paragraph 106 UrhG). Eigentum und alle Rechte, auch für Patenterteilung und Gebrauchsmustereintragung, vorbehalten. SPX Flow Technology Rosista GmbH.

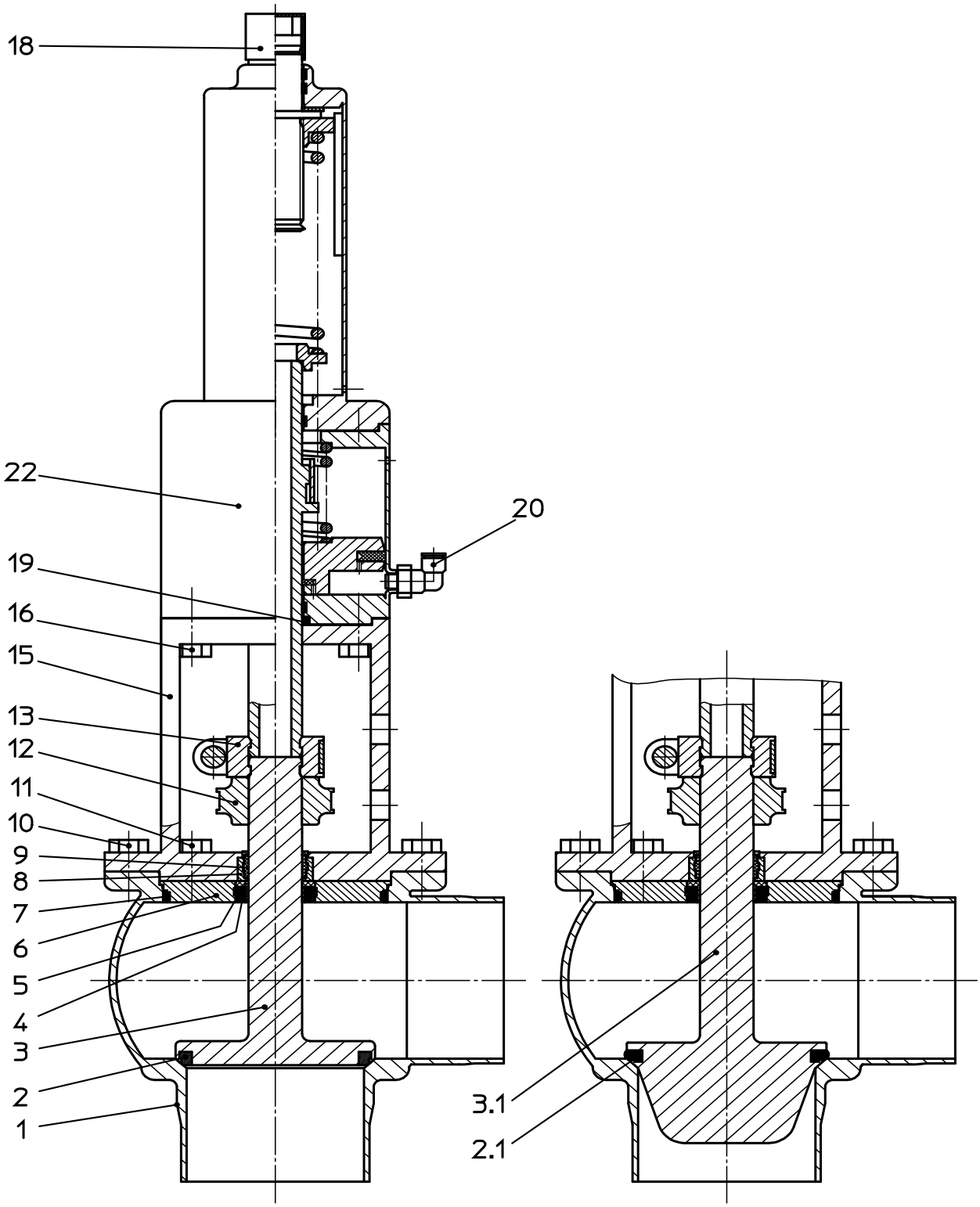

Datum:	18.0714									
Name:	Trytko									
Geprüft:										

Ersatzteilliste: spare parts list

Überströmventil / Relief valve UF3, UFE3, UFR3, UFRE3

Ausführungen: I. Federzylinder und II. Federzylinder mit Anlüftzylinder

Designs: I. spring cylinder and II. spring cylinder with seat lift actuator

1-4 zoll / inch

A3®

APV

SPX Flow Technology Rosista GmbH
D-59425 Unna Germany

Blatt 2 von 7

RN 01.054.574

Weitergabe sowie Vervielfältigung dieser Unterlage, Verwertung und Mitteilung ihres Inhalts nicht gestattet, soweit nicht schriftlich zugestanden. Verstoß verpflichtet zum Schadensersatz und kann strafrechtliche Folgen haben (Paragraph 18 UWG, Paragraph 106 UrhG). Eigentum und alle Rechte, auch für Patenterteilung und Gebrauchsmustereintragung, vorbehalten. SPX Flow Technology Rosista GmbH.

Weitergabe sowie Vervielfältigung dieser Unterlage, Verwertung und Mitteilung ihres Inhalts nicht gestattet, soweit nicht schriftlich zugestanden. Verstoß verpflichtet zum Schadensersatz und kann strafrechtliche Folgen haben (Paragraph 18 UWG, Paragraph 106 UrhG). Eigentum und alle Rechte, auch für Patenterteilung und Gebrauchsmustereintragung, vorbehalten. SPX Flow Technology Rosista GmbH.

Ersatzteilliste: spare parts list

Überströmventil / Relief valve UF3, UFE3, UFR3, UFRE3
Ausführungen: I. Federzylinder und II. Federzylinder mit Anlüftzylinder
Designs: I. spring cylinder and II. spring cylinder with seat lift actuator
1-4 zoll / inch

A3 ®

Datum:	18.0714			
Name:	Trytko			
Geprüft:				
Datum:				
Name:				
Geprüft:				

APV
SPX Flow Technology Rosista GmbH
D-59425 Unna Germany

Blatt 3 von 7

RN 01.054.574

pos. item	Menge quantity	Beschreibung description	Material material	1" WS-Nr. ref.-no.	1,5" WS-Nr. ref.-no.	2" WS-Nr. ref.-no.	2,5" WS-Nr. ref.-no.	3" WS-Nr. ref.-no.	4" WS-Nr. ref.-no.
1	1	Gehäuse UF31 1+2S Housing blank geschliffen / bright ground	1.4404	3A0 15-41-324/43 H207629	3A0 15-41-424/43 H207465	3A0 15-41-474/43 H206981	3A0 15-41-524/43 H207451	3A0 15-41-551/43 H207124	3A0 15-41-674/43 H312067
	1	Gehäuse UF31 1+2S Housing matt-glänzend / satin finish	1.4404	3A0 15-41-324/47 H324735	3A0 15-41-424/47	3A0 15-41-474/47 H326982	3A0 15-41-524/47	3A0 15-41-551/47 H320211	3A0 15-41-674/47 H320603
	1	Gehäuse UF32 1+2+3S Housing blank geschliffen / bright ground	1.4404	3A 0 15-42-313/43 H207628	3A0 15-42-413/43	3A0 15-42-463/43 H320314	3A0 15-42-513/43	3A0 15-42-551/43 H207462	3A0 15-42-674/43
	1	Gehäuse UF32 1+2+3S Housing matt-glänzend / satin finish	1.4404	3A 0 15-42-313/47	3A0 15-42-413/47	3A0 15-42-463/47	3A0 15-42-513/47	3A0 15-42-551/47	3A0 15-42-674/47
1.1	1	Gehäuse UFE31 1+2S Housing blank geschliffen / bright ground	1.4404	3A0 15-46-313/43	3A0 15-46-413/43	3A0 15-46-463/43	3A0 15-46-513/43	3A0 15-46-551/43	3A0 15-46-663/43
	1	Gehäuse UFE31 1+2S Housing matt-glänzend / satin finish	1.4404	3A0 15-46-313/47	3A0 15-46-413/47	3A0 15-46-463/47	3A0 15-46-513/47	3A0 15-46-551/47	3A0 15-46-663/47
	1	Gehäuse UFE32 1+2+3S Housing blank geschliffen / bright ground	1.4404	3A0 15-47-313/43	3A0 15-47-413/43	3A0 15-47-463/43	3A0 15-47-513/43	3A0 15-47-551/43	3A0 15-47-663/43
	1	Gehäuse UFE32 1+2+3S Housing matt-glänzend / satin finish	1.4404	3A0 15-47-313/47	3A0 15-47-413/47	3A0 15-47-463/47	3A0 15-47-513/47	3A0 15-47-551/47	3A0 15-47-663/47
	1	Gehäuse UFE33 1+2+3S Housing blank geschliffen / bright ground	1.4404	3A0 15-48-313/43	3A0 15-48-413/43	3A0 15-48-463/43	3A0 15-48-513/43	3A0 15-48-551/43	3A0 15-48-663/43
	1	Gehäuse UFE33 1+2+3S Housing matt-glänzend / satin finish	1.4404	3A0 15-48-313/47	3A0 15-48-413/47	3A0 15-48-463/47	3A0 15-48-513/47	3A0 15-48-551/47	3A0 15-48-663/47
	1	Gehäuse UFE34 1+2+3+4S Housing blank geschliffen / bright ground	1.4404	3A0 15-49-313/43	3A0 15-49-413/43	3A0 15-49-463/43	3A0 15-49-513/43	3A0 15-49-551/43 H321669	3A0 15-49-663/43
	1	Gehäuse UFE34 1+2+3+4S Housing matt-glänzend / satin finish	1.4404	3A0 15-49-313/47	3A0 15-49-413/47 H320651	3A0 15-49-463/47	3A0 15-49-513/47	3A0 15-49-551/47	3A0 15-49-663/47
2	1	Tellerdichtung Seat seal	EPDM FDA-konform	58-33-293/93 H77442	58-33-393/93 H77467	58-33-443/93 H77491	58-33-493/93 H77515	58-33-568/93 H77561	58-33-643/93 H77586
	1	Tellerdichtung Seat seal	FPM FDA-konform	58-33-293/73 H77441	58-33-393/73 H77466	58-33-443/73 H77490	58-33-493/73 H77514	58-33-568/73 H77560	58-33-643/73 H77785
	1	Tellerdichtung Seat seal	HNBR FDA-konform	58-33-293/33 H170176	58-33-393/33 H166676	58-33-443/33 H166085	58-33-493/33 H166678	58-33-568/33 H166679	58-33-643/33 H166682
	1	Tellerdichtung Seat seal	VMQ FDA-konform	58-33-293/13 H77440	58-33-393/13 H77465	58-33-443/13 H77489	58-33-493/13 H77513	58-33-568/13 H77559	58-33-643/13 H77584

Weitergabe sowie Vervielfältigung dieser Unterlage, Verwertung und Mitteilung ihres Inhalts nicht gestattet, soweit nicht schriftlich zugestanden. Verstoß verpflichtet zum Schadensersatz und kann strafrechtliche Folgen haben (Paragraph 18 UWG, Paragraph 106 UrhG). Eigentum und alle Rechte, auch für Patenterteilung und Gebrauchsmustereintragung, vorbehalten. SPX Flow Technology Rosista GmbH.

Ersatzteilliste: spare parts list

Überströmventil / Relief valve UF3, UFE3, UFR3, UFRE3
Ausführungen: I. Federzylinder und II. Federzylinder mit Anlüftzylinder
Designs: I. spring cylinder and II. spring cylinder with seat lift actuator
1-4 zoll / inch

A3 ®

Datum:	18.0714			
Name:	Trytko			
Geprüft:				
Datum:				
Name:				
Geprüft:				

APV
SPX Flow Technology Rosista GmbH
D-59425 Unna Germany

Blatt 4 von 7

RN 01.054.574

pos. item	Menge quantity	Beschreibung description	Material material	1" WS-Nr. ref.-no.	1,5" WS-Nr. ref.-no.	2" WS-Nr. ref.-no.	2,5" WS-Nr. ref.-no.	3" WS-Nr. ref.-no.	4" WS-Nr. ref.-no.
2.1	1	Tellerdichtung Seat seal	EPDM FDA-konform	58-33-294/93 H77445	58-33-394/93 H77470	58-33-444/93 H77494	58-33-494/13 H77516	58-33-569/13 H77561	58-33-644/13 H77587
	1	Tellerdichtung Seat seal	FPM FDA-konform	58-33-294/73 H77444	58-33-394/73 H77469	58-33-444/73 H77493	58-33-494/33 H172178	58-33-569/33 H176688	58-33-644/33 H172183
	1	Tellerdichtung Seat seal	HNBR FDA-konform	58-33-294/33 H172173	58-33-394/33 H172175	58-33-444/33 H165709	58-33-494/73 H77517	58-33-569/73 H77563	58-33-644/73 H77588
	1	Tellerdichtung Seat seal	VMQ FDA-konform	58-33-294/13 H77443	58-33-394/13 H77468	58-33-444/13 H77492	58-33-494/93 H77518	58-33-569/93 H77564	58-33-644/93 H77589
3	1	Schaft UF3 Shaft	1.4404	15-22-170/42 H105422	15-22-417/42 H30207	15-22-467/42 H30290	15-22-517/42 H30363	15-22-559/42 H30439	15-22-667/42 H30532
3.1	1	Schaft mit Regelkegel UFR3 Shaft with control cone	1.4404	15-22-171/42 H105424	15-22-164/42 H140321	15-22-165/42 H29993	15-22-166/42 H29995	15-22-154/42 H39988	15-22-218/42 H144652
4	1	Schaftdichtung Shaft seal	Turcon MF6	3A0 58-33-151/24 H323082					
5	1	Tellerdichtung Seat seal	EPDM FDA-konform	58-33-293/93 H77442					
	1	Tellerdichtung Seat seal	FPM FDA-konform	58-33-293/73 H77441					
	1	Tellerdichtung Seat seal	HNBR FDA-konform	58-33-293/33 H170176					
	1	Tellerdichtung Seat seal	VMQ FDA-konform	58-33-293/13 H77440					
6	1	Gehäusedeckel Housing cover	1.4404	15-00-065/42 H156869	15-00-069/42 H156409	15-00-793/42 H148194	15-00-794/42 H151968	15-00-799/42 H159895	15-00-798/42 H159888
7	1	Gehäusedichtung Housing seal	EPDM FDA-konform	58-33-292/93 H77439	58-33-392/93 H77464	58-33-442/93 H77488	58-33-492/93 H77512	58-33-567/93 H77558	58-33-642/93 H77583
	1	Gehäusedichtung Housing seal	HNBR FDA-konform	58-33-292/33 H170017	58-33-392/33 H170018	58-33-442/33 H168714	58-33-492/33 H168759	58-33-567/33 H170013	58-33-642/33 H170074
	1	Gehäusedichtung Housing seal	FPM FDA-konform	58-33-292/73 H77438	58-33-392/73 H77463	58-33-442/73 H77487	58-33-492/73 H77511	58-33-567/73 H77557	58-33-642/73 H77582
8	1	Führungsbuchse Bushing	1.4301	08-01-181/12 H148192			08-01-179/12 H156220		

Weitergabe sowie Vervielfältigung dieser Unterlage, Verwertung und Mitteilung ihres Inhalts nicht gestattet, soweit nicht schriftlich zugestanden. Verstoß verpflichtet zum Schadensersatz und kann strafrechtliche Folgen haben (Paragraph 18 UWG, Paragraph 106 UrhG). Eigentum und alle Rechte, auch für Patenterteilung und Gebrauchsmustereintragung, vorbehalten. SPX Flow Technology Rosista GmbH.

Ersatzteilliste: spare parts list

Überströmventil / Relief valve UF3, UFE3, UFR3, UFRE3
Ausführungen: I. Federzylinder und II. Federzylinder mit Anlüftzylinder
Designs: I. spring cylinder and II. spring cylinder with seat lift actuator
1-4 zoll / inch

A3 ®

Datum:	18.0714				
Name:	Trytko				
Geprüft:					
Datum:					
Name:					
Geprüft:					

APV
SPX Flow Technology Rosista GmbH
D-59425 Unna Germany

Blatt 5 von 7

RN 01.054.574

pos. item	Menge quantity	Beschreibung description		Material material	1" WS-Nr. ref.-no.	1,5" WS-Nr. ref.-no.	2" WS-Nr. ref.-no.	2,5" WS-Nr. ref.-no.	3" WS-Nr. ref.-no.	4" WS-Nr. ref.-no.
9	1	Führungsbuchse Bushing		Ketronpeek 1000	3A0 08-01-178/23 H315800					
10	4	Skt. Schraube Hex. screw	DIN EN 24017-A2-70	1.4301	65-01-081/15 M8x16 H78772					65-01-130/15 M10x16 H78806
11	1	Skt. Schraube Hex. screw	DIN EN 24017-A2-70	1.4301	65-01-056/13 M6x16 H78751	65-01-081/15 M8x16 H78772				
12	1	Schaltnocke Operating cam		1.4301 / PA12	08-60-082/12 H16295		08-52-135/93 H165885			
13	1	Kupplung Coupling		1.4301	08-52-110/13 H15938					
14	1	Zwischenstück Intermediate piece		1.4404	09-87-084/42 H19710		09-87-085/42 H19711			
15	1	Laterne Yoke	Ausf. 3A-blank geschl. design 3A-bright ground fin.	1.4308	3A0 16-40-091/13 H207630	3A0 16-40-415/13 H206275	3A0 16-40-465/17 H206276	3A0 16-40-515/13 H206277	3A0 16-40-565/17 H206278	3A0 16-40-096/13 H328054
	1	Laterne Yoke	Ausführung matt-gl. design satin finish	1.4308	16-40-091/17 H164718	16-40-385/17 H40502	16-40-435/17 H40511	16-40-485/17 H40529	16-40-560/17 H40547	16-40-096/17 H179815
16	4	Skt. Schraube Hex. screw	DIN EN 24017-A2-70	1.4301	65-01-079/15 M8x14 H78768					
17	1	Führungsband PTFE guide strap		Turcite	08-39-079/93 H14879					
18	1	Verschlußkappe Cap		PE-weich-gelb	08-60-006/93 H16219					
19	1	O-Ring O-ring	20,2x3	NBR	58-06-078/83 H76943					
20	1	W-Verschraubung Elbow connector	G1/8" 1/4" OD	1.4301/PA	08-60-811/93 H312732					
21	1	Federzylinder Spring cylinder	Ausf. 3A-blank geschl. design 3A-bright ground finish	1.4301	je nach Druckbereich entsprechenden Federzylinder einsetzen use spring cylinder depending on required pressure range Nr.31 3A0 16-30-170/13 H207529	Nr.32 3A0 16-30-171/13 H207639	Nr.33 3A0 16-30-172/13 H314296	Nr.34 3A0 16-30-173/13 H310629		

Weitergabe sowie Vervielfältigung dieser Unterlage, Verwertung und Mitteilung ihres Inhalts nicht gestattet, soweit nicht schriftlich zugestanden. Verstoß verpflichtet zum Schadensersatz und kann strafrechtliche Folgen haben (Paragraph 18 UWG, Paragraph 106 UrhG). Eigentum und alle Rechte, auch für Patenterteilung und Gebrauchsmustereintragung, vorbehalten. SPX Flow Technology Rosista GmbH.

Ersatzteilliste: spare parts list

Überströmventil / Relief valve UF3, UFE3, UFR3, UFRE3
Ausführungen: I. Federzylinder und II. Federzylinder mit Anlüftzylinder
Designs: I. spring cylinder and II. spring cylinder with seat lift actuator
1-4 zoll / inch

Datum:	18.0714				
Name:	Trytko				
Geprüft:					
Datum:					
Name:					
Geprüft:					

APV
SPX Flow Technology Rosista GmbH
D-59425 Unna Germany

Blatt 6 von 7

RN 01.054.574

pos. item	Menge quantity	Beschreibung description		Material material	1" WS-Nr. ref.-no.	1,5" WS-Nr. ref.-no.	2" WS-Nr. ref.-no.	2,5" WS-Nr. ref.-no.	3" WS-Nr. ref.-no.	4" WS-Nr. ref.-no.
21	1	Federzylinder Spring cylinder	Ausführung matt-gl. design satin finish	1.4301	je nach Druckbereich entsprechenden Federzylinder einsetzen use spring cylinder depending on required pressure range Nr.31 16-30-170/17 H39536		Nr.32 16-30-171/17 H39537	Nr.33 16-30-172/17 H39538		Nr.34 16-30-173/17 H39539
22	1	Federzylinder mit Anlüftzylinder Spring cylinder with seat lift actuator	Ausf. 3A-blank geschl. design 3A-bright ground finish	1.4301	je nach Druckbereich entsprechenden Federzylinder mit Anlüftzylinder einsetzen use spring cylinder with seat lift actuator depending on required pressure range 3A0 16-30-180/13 Nr.31-12 3A0 16-30-181/13 Nr.31-25		3A0 16-30-182/13 Nr.32-12 H207772 3A0 16-30-183/13 Nr.32-25 H319112	3A0 16-30-184/13 Nr.33-12 H207469 3A0 16-30-185/13 Nr.33-25 H206978		3A0 16-30-186/13 Nr.34-25 H207122
22	1	Federzylinder mit Anlüftzylinder Spring cylinder with seat lift actuator	Ausführung matt-gl. design satin finish	1.4301	je nach Druckbereich entsprechenden Federzylinder mit Anlüftzylinder einsetzen use spring cylinder with seat lift actuator depending on required pressure range Nr.31-12 16-30-180/17 H39543 Nr.31-25 16-30-181/17 H39544		Nr.32-12 16-30-182/17 H39545 Nr.32-25 16-30-183/17 H39546	Nr.33-12 16-30-184/17 H39547 Nr.33-25 16-30-185/17 H39548		Nr.34-25 16-30-186/17 H39549

Weitergabe sowie Vervielfältigung dieser Unterlage, Verwertung und Mitteilung ihres Inhalts nicht gestattet, soweit nicht schriftlich zugestanden. Verstoß verpflichtet zum Schadensersatz und kann strafrechtliche Folgen haben (Paragraph 18 UWG, Paragraph 106 UrhG). Eigentum und alle Rechte, auch für Patenterteilung und Gebrauchsmustereintragung, vorbehalten. SPX Flow Technology Rosista GmbH.

Ersatzteilliste: spare parts list

Überströmventil / Relief valve UF3, UFE3, UFR3, UFRE3
Ausführungen: I. Federzylinder und II. Federzylinder mit Anlüftzylinder
Designs: I. spring cylinder and II. spring cylinder with seat lift actuator
1-4 zoll / inch

A3 ®

Datum:	18.0714			
Name:	Trytko			
Geprüft:				
Datum:				
Name:				
Geprüft:				

APV
SPX Flow Technology Rosista GmbH
D-59425 Unna Germany

Blatt 7 von 7

RN 01.054.574

pos. item	Menge quantity	Beschreibung description	Material material	1" WS-Nr. ref.-no.	1,5" WS-Nr. ref.-no.	2" WS-Nr. ref.-no.	2,5" WS-Nr. ref.-no.	3" WS-Nr. ref.-no.	4" WS-Nr. ref.-no.
		Dichtungssatz / seal kit UF3, UFE3 Pos. 2, 4, 5, 7, 9 nur im kompletten Dichtungssatz erhältlich / Item 2, 4, 5, 7, 9 available as complete seal kits only							
		Dichtungssatz Seal kit	FPM	3A0 58-34-438/00	3A0 58-34-439/00	3A0 58-34-440/00	3A0 58-34-441/00	3A0 58-34-443/00	3A0 58-34-444/00
		Dichtungssatz Seal kit	EPDM	3A0 58-34-438/01 H322816	3A0 58-34-439/01 H322817	3A0 58-34-440/01 H322818	3A0 58-34-441/01 H322819	3A0 58-34-443/01 H322820	3A0 58-34-444/01 H322821
		Dichtungssatz Seal kit	VMQ	3A0 58-34-438/02	3A0 58-34-439/02	3A0 58-34-440/02	3A0 58-34-441/02	3A0 58-34-443/02	3A0 58-34-444/02
		Dichtungssatz Seal kit	HNBR	3A0 58-34-438/06	3A0 58-34-439/06	3A0 58-34-440/06	3A0 58-34-441/06	3A0 58-34-443/06	3A0 58-34-444/06
		Dichtungssatz / seal kit UFR3, UFRE3 (mit Regelkegel / with control cone) Pos. 2.1, 4, 5, 7, 9 nur im kompletten Dichtungssatz erhältlich / Item 2.1, 4, 5, 7, 9 available as complete seal kits only							
		Dichtungssatz Seal kit	FPM	3A0 58-34-450/00	3A0 58-34-451/00	3A0 58-34-452/00	3A0 58-34-453/00	3A0 58-34-455/00	3A0 58-34-456/00
		Dichtungssatz Seal kit	EPDM	3A0 58-34-450/01 H322822	3A0 58-34-451/01 H322823	3A0 58-34-452/01 H322824	3A0 58-34-453/01 H322825	3A0 58-34-455/01 H322826	3A0 58-34-456/01 H322827
		Dichtungssatz Seal kit	VMQ	3A0 58-34-450/02	3A0 58-34-451/02	3A0 58-34-452/02	3A0 58-34-453/02	3A0 58-34-455/02	3A0 58-34-456/02
		Dichtungssatz Seal kit	HNBR	3A0 58-34-450/06	3A0 58-34-451/06	3A0 58-34-452/06	3A0 58-34-453/06	3A0 58-34-455/06	3A0 58-34-456/06

APV DELTA UF3(A) / UFR3(A)

RELIEF VALVE

SPX FLOW
Design Center
Gottlieb-Daimler-Straße 13
D-59439 Holzwickede, Germany
P: (+49) (0) 2301-9186-0
F: (+49) (0) 2301-9186-300

SPX FLOW
Production
Stefana Rolbieskiego 2
PL- Bydgoszcz 85-862, Poland
P: (+48) 52 566 76 00
F: (+48) 52 525 99 09

SPX FLOW reserves the right to incorporate the latest design and material changes without notice or obligation.

Design features, materials of construction and dimensional data, as described in this manual, are provided for your information only and should not be relied upon unless confirmed in writing. Please contact your local sales representative for product availability in your region. For more information visit www.spxflow.com.

ISSUED 04/2017 - Translation of Original Manual
COPYRIGHT ©2017 SPX FLOW, Inc.