SPXFLOW

INSTRUCTION MANUAL

# APV DELTA DA3+

## DOUBLE SEAT MIXPROOF VALVE

FORM NO.: H179518 REVISION: UK-5

READ AND UNDERSTAND THIS MANUAL PRIOR TO OPERATING OR SERVICING THIS PRODUCT.

Scan for DA3+ Valve
Maintenance Video

APV®

UK

SPXFLOW

# Declaration of Conformity
# for Valves and Valve Manifolds

SPX FLOW Technology Rosista GmbH, Gottlieb-Daimler-Str. 13, D-59439 Holzwickede
herewith declares that the

**APV double seal and double seat valves of the series**
**SD4, SDT4, SDU4, SDMS4, SDMSU4, SDTMS4, SWcip4, DSV,**
**DA3, DA3SLD, DE3, DEU3, DET3, DKR2, DKRT2, DKRH2**
in the nominal diameters DN 25 - 150, ISO 1“ – 6“ and 1 Sh5 - 6 Sh5

**APV butterfly valves of the series SV1 and SVS1F, SVL and SVSL**
in the nominal diameters DN 25 - 100, DN 125 - 250 and ISO 1“ – 4“

**APV ball valves of the series KHI, KHV**
in the nominal diameters DN 15 - 100

**APV single seat, diaphragm and spring loaded valves of the series**
**S2, SW4, SWhp4, SW4DPF, SWmini4, SWT4, SWS4, MF4, MS4, MSP4, AP/T1, CPV,**
**RG4, RG4DPF, RGMS4, RGE4, RGE4DPF, RGEMS4, PR2, PRD2, SI2, UF/R3, VRA/H**
in the nominal diameters DN 10 - 150, ISO 1/2“ – 4“ and 1 Sh5 - 6 Sh5

and the valve manifolds installed thereof

meet the requirements of the Directives 2006/42/EC (superseding 89/392/EEC
and 98/37/EC) and ProdSG (superseding GPSG - 9.GPSGV).

For official inspections, SPX FLOW Technology Rosista GmbH presents
a technical documentation according to Appendix VII of the Machinery Directive,
this documentation consisting of documents of the development and construction,
description of measures taken to meet the conformity and to correspond with
the basic requirements on safety and health, incl. an analysis of the risks,
as well as an operating manual with safety instructions.

The conformity of the valves and valve manifolds is guaranteed.

Authorised person for the documentation:
SPX FLOW Technology Rosista GmbH, Frank Baumbach,
Gottlieb-Daimler-Str. 13, D-59439 Holzwickede

January 2017

ppa. Baumbach
---
Manager Research and Development

APV®

# Content

| | | Page |
|---|---|---|
| **1.** | **General Terms** | **2** |
| **2.** | **Safety Instructions** | **2** |
| **3.** | **Intended Use** | **3** |
| **4.** | **Mode of Operation** | **4 - 5** |
| 4.1. | General Terms | |
| 4.2. | Valve in “closed” position | |
| 4.3. | Valve in “open” position | |
| **5.** | **Auxiliary Equipment** | **6** |
| 5.1. | Valve position indication (proximity switches) | |
| 5.2. | Control Unit | |
| 5.3. | Adapter for Control Unit | |
| **6.** | **Cleaning** | **7 - 8** |
| 6.1. | Flow areas | |
| 6.2. | Seal surfaces | |
| 6.3. | Leakage chamber | |
| 6.4. | Cleaning recommendation | |
| 6.5. | Flushing quantity | |
| 6.6. | Cleaning of upper area | |
| 6.7. | Cleaning of lower area | |
| **7.** | **Installation** | **9** |
| 7.1. | Welding instructions | |
| **8.** | **Dimensions/Weights** | **10** |
| **9.** | **Technical Data** | **11 - 13** |
| 9.1. | General data | |
| 9.2. | Compressed air quality | |
| 9.3. | kvs values | |
| 9.4. | Air consumption/closing times | |
| 9.5. | Valve stroke open/closed | |
| **10.** | **Maintenance** | **14** |
| **11.** | **Service Instructions** | **15 - 19** |
| 11.1. | Dismantling from pipe system | |
| 11.2. | Disassembly of wear parts (product-wetted parts) | |
| 11.3. | Actuator / main cylinder (maintenance) | |
| 11.3.1. | Dismantling of seals and disassembly of seat lift actuator and main cylinder | |
| 11.3.2. | Installation of seals and assembly of seat lift actuator and main cylinder | |
| 11.4. | Installation of seals and assembly of valve | |
| 11.5. | Installation of valve insert | |
| **12.** | **Disassembly and Assembly Tool** | **20** |
| 12.1. | Installation of lower shaft seal | |
| 12.1.1. | Installation of PTFE seal | |
| 12.1.2. | Installation of elastomer seal | |
| **13.** | **Assembly Tool for Middle Seal** | **21** |
| **14.** | **Trouble Shooting** | **22** |
| **15.** | **Spare Parts Lists and Lubrication Chart** | **23** |
| | (see annex) | |
| | DA3 DN40 - 150, Inch 1,5” - 4” RN 01.053.73 | |
| | DA3 1,5 - 4 Sh5 RN 01.053.73 - 2 | |
| | DA3 Lubrication chart RN 260.064 - 1 | |

## 1. General Terms

This instruction manual should be read carefully by the competent operating and maintenance personnel.

We point out that we will not accept any liability for damage or malfunctions resulting from the non-compliance with this instruction manual.

Descriptions and data given herein are subject to technical changes.

## 2. Safety Instructions

**DANGER!**

- The technical safety symbol draws your attention to important directions for operating safety. You will find it wherever the activities described are bearing risks of personal injury.
- Disconnect electrical and pneumatic connections.
- **Depressurize** the line and cleaning system and discharge the lines, if possible, before any maintenance work.
- Observe Service Instructions to ensure safe maintenance of the valve.
- Connections which are not used must be sealed by a plug.
- A safe discharge of the cleaning liquids must be ensured.
- The valve must be assembled, disassembled and reassembled only by persons who have been trained in APV valves or by SPX FLOW service team members. If necessary, contact your local SPX FLOW representative.
- Welded actuators are preloaded by spring force.

**Opening of the actuators is strictly forbidden.**
**Danger to life!**

Actuators which are no longer used and / or defective must be disposed in professional manner.

Defective actuators must be returned to your SPX FLOW company for their professional disposal and free of charge for you.

Please address to your local SPXFLOW.

# 3. Intended Use

The intended use as field of application of the double seat valve is the shut-off of pipeline sections.

Arbitrary, structural changes at the valve may affect safety as well as the intended functionality of the valve and are ***not*** permissible.

**Authorizations and External Approvals:**
EHEDG Certification
ATEX (Directive 2014/34/EU)

# 4. Mode of Operation

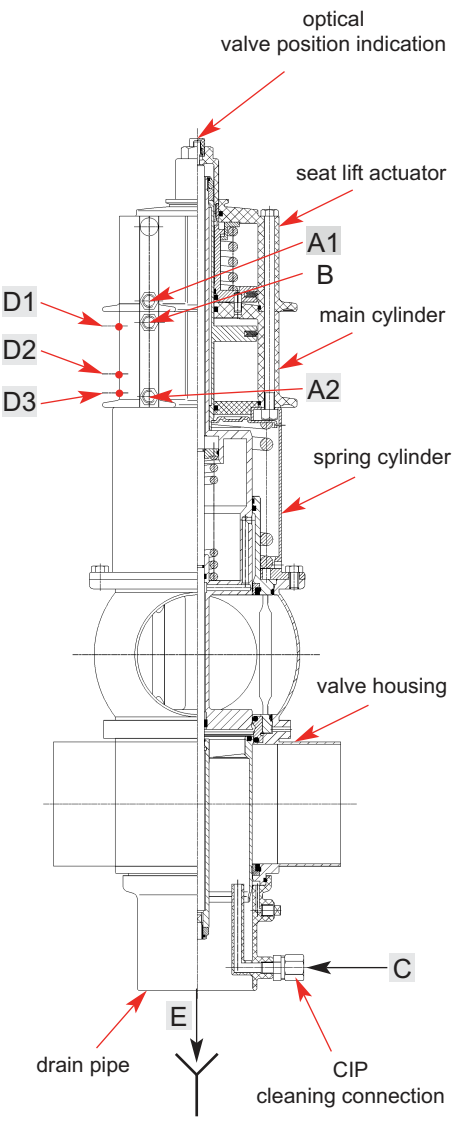


## 4.1. General Terms

Due to its construction and mode of operation as well as to the use of high quality stainless steel and adequate seal materials, the double-seat mixproof valve DELTA DA3 is suited for applications in the food and beverage industries as well as in the pharmaceutical and chemical industries

- The valve opens from the top to the bottom in low leakage operation (unpressurized drain of fluid residues via the annular cleaning gaps in the seat area).

- Separation of two line passages by two balanced and independently operating valve slides with intervening leakage chamber.

- Arising leakages at the seat seals are discharged at **(E)** in depressurized state.

- Proximity switches can be installed as valve position indicators.
  **D1** = valve position "closed"
  **D2** = valve position "open" (DN 40, 1,5” only)
  **D3** = valve position "open" (DN 50 to 150, 2” - 4”)

- An optical indication of the valve position is installed in the upper area.

- Operation by pneumatic actuator with air connection at **(B)**. Reset by spring force into the safety limit position “closed”.

  **B** = valve open

- Maintainable actuator (see **11.3.**).

- Cleaning of the leakage chamber is undertaken via the cleaning connection **(C)**.

- Cleaning of the seat and shaft seal areas is realized by operation of the air connections::

  **A1** = lifting of lower shaft

  **A2** = lifting of upper shaft

- Reset by spring force.

# 4. Mode of Operation

fig. 4.2.

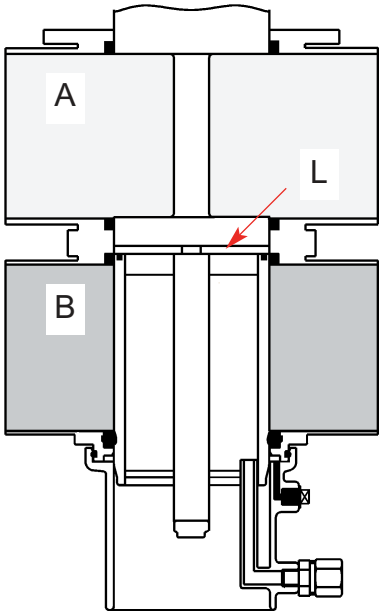


## 4.2. Valve in “closed” position

The lower and upper valve shafts are closed by spring force and safely separate the different fluids **A** and **B**. The leakage chamber **L** which is situated between the two valve shafts, provides for a free and absolutely depressurized discharge to the bottom. The valve shafts are balanced and, thus, safe against pressure hammers.

fig. 4.3.

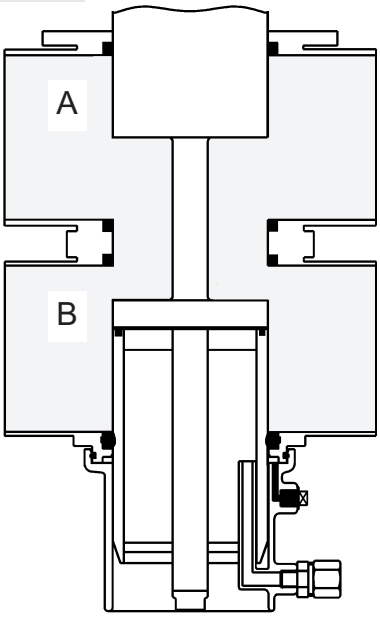


## 4.3. Valve in “open” postion

By control of the actuator, the upper valve shaft is pressed against the seal of the lower valve shaft. Thus, the leakage chamber **L** is closed against the product chamber.
Then the two valve shafts move downwards into the open position. A connection between the two pipelines **A** and **B** is produced.

# 5. Auxiliary Equipment

fig. 5.1.

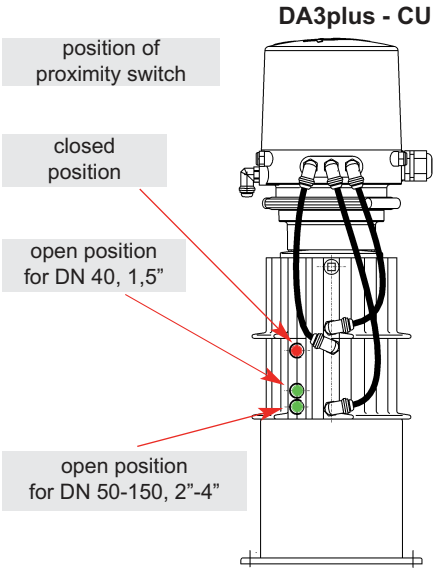


## 5.1. Valve position indication

Proximity switches to signal the limit position of the valve shafts can be installed at the actuator if requested (fig. 5.1.).

We recommend to use our APV standard types:
**three-wire proximity switch**
operating distance: 5 mm / diameter: 11 mm.
operating voltage 10 - 30 V DC
pnp pulse-shifting, closing function
installation “non-flush”

If the customer decides to use valve position indicators other than APV type, we cannot take over any liability for a faultless function.

## 5.2. CONTROL UNIT

The installation of a control unit of the DA3+ valve is possible.

**The following different designs are available:**

**Control Unit CU3**

**Control Unit CU4**

| 3 solenoid valves | |
|---|---|
| **Direct Connect reference number:** | **CU43-M-Direct Connect**<br>08 - 45 - 105/93<br>**H320465** |
| **Profibus reference number:** | **CU33-DA3 Profibus**<br>08 - 45 - 004/93<br>**H315498** |
| **Device Net reference number:** | **CU33 - Device Net**<br>16 - 31 - 242/93<br>**H209425** |
| **ASinterface reference number:** | **CU43-M-AS-i extended 62 slaves**<br>08 - 45 - 115/93<br>**H320472** |

- For the installation of the control unit on the DA3+ valve an adapter is required:

## 5.3. Adapter for Control Unit

**CU33 Profibus, CU33 Device Net, CU33 ASinterface 2.1**
**CU33 adapter DA3**
**reference number: 000 08 - 48 - 471/93, H314469**

- **Adapter for Control Unit**
  **CU43 M - Direct Connect, CU43 M - AS - i extended**
  **reference number: 000 08 - 48 - 602/93, H320476**

# 6. Cleaning

Cleaning the DELTA DA3+ valve, one has to distinguish between three areas:

**6.1. The flow areas**
The upper and lower passages are cleaned by the passing cleaning liquid during the cleaning of the connected pipelines.

**6.2. The seal surfaces**
The seal surfaces of the **upper area** (upper shaft and seat seal) and the **lower area** (lower shaft and seat seal) are **flushed and cleaned** by cleaning liquid through lifting of the individual valve shafts during the cleaning of the respective passage.

**6.3. The lekage chamber**
The cleaning of the leakage chamber is undertaken by CIP spraying. CIP cleaning connection **(C)**.
The valve shafts being lifted, the CIP liquid also cleans the leakage chamber.

The spraying does not produce pressure build-up in the leakage chamber and can be carried out in closed and in open valve position. The conduct of the cleaning liquid provides for a biologically perfect cleaning of the whole leakage chamber.

Under standard conditions
**15 valves DN 40 - 100 / 1,5" - 4"**
**10 valves DN 125 - 150** can be cleaned
**via one spray distribution line DN 25.**

**fig. 6.3.**

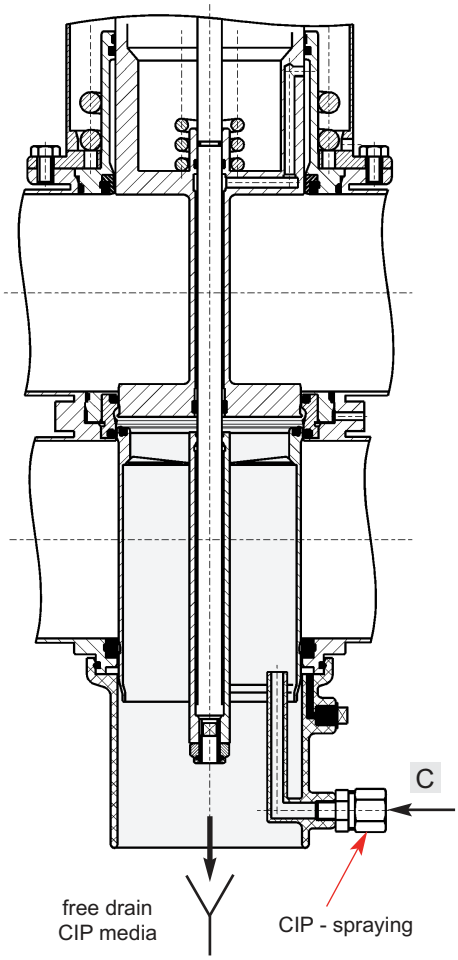


**6.4. Cleaning recommendation:**

| Cleaning steps | lifting cycle | CIP spraying |
|---|---|---|
| pre-flushing | ———————— | 3 x 10 sec. |
| caustic flushing 80 °C | 3 x 5 sec. | 3 x 10 sec. |
| intermediate flushing | 2 x 5 sec. | 2 x 10 sec. |
| acid flushing | 3 x 5 sec. | 3 x 10 sec. |
| subsequent flushing | 2 x 5 sec. | 2x 10 sec. |

- The lifting cycles refer to a cleaning pressure of **p = 2 - 5 bar**
- Depending on the pressure ratio, cleaning temperatures, cleaning steps and degree of soiling, different cycles must be adjusted.
- Flushing quantities per CIP spraying cycle:
  **DN 40 -100 / 1,5" - 4"** **about 1,2ltr/10s**
  **DN 125, 150** **about 5ltr/10s**
- Cleaning pressure at CIP cleaning connection: **min. 2 bar.**
  **max. 5 bar.**

# 6. Cleaning

fig. 6.6.

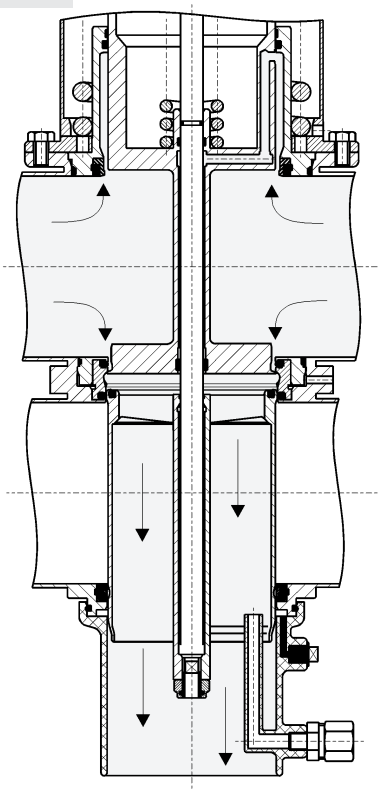

## 6.5. Flushing quantity in ml per lifting cycle / 5 sec.

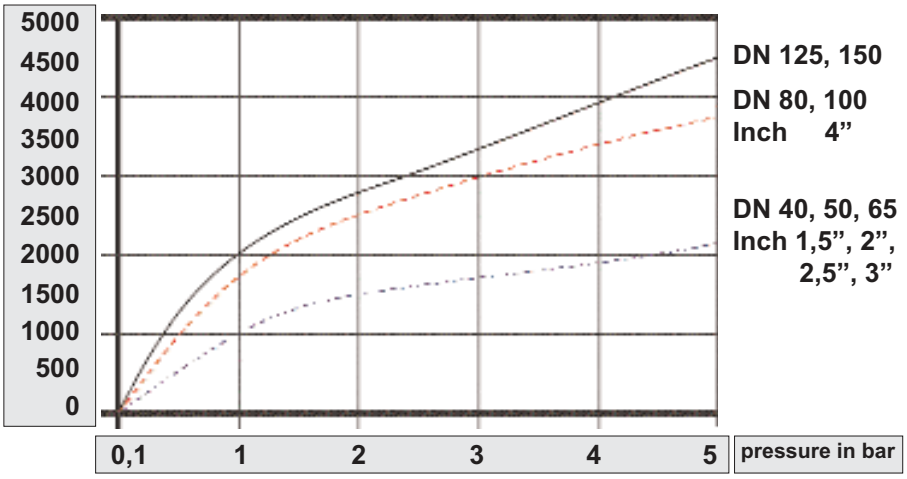


## 6.6. Cleaning of upper area (fig. 6.6.)

The upper valve shaft is lifted via the connection

**(A2)**

By lifting of the upper valve shaft, the cleaning liquid flushes over the upper seat seal and the upper valve seat into the leakage chamber and cleans this area. The cleaning liquid is drained off to the bottom in depressurized state.

Simultaneously, the upper shaft seal and the outer surface of the upper valve shaft are cleaned. Then the cleaning liquid is drained off at the inner tube of the lower valve shaft to the bottom.

The lifting stroke is limited by a metallic stop.

fig. 6.7.

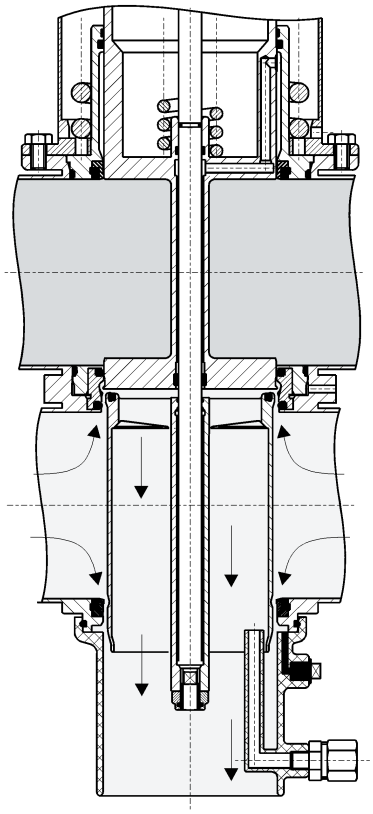

## 6.7. Cleaning of lower area (fig. 6.7.)

The lower valve shaft is lifted via the connection

**(A1)**

By lifting of the lower valve shaft, the cleaning liquid flushes over the lower seat seal into the leakage chamber and cleans this area. The cleaning liquid is drained off to the bottom in depressurized state.

Simultaneously, the lower shaft seal and the outer surfaces of the lower valve shaft are cleaned. The cleaning liquid flushes the spray connection and is then drained off to the bottom in depressurized state.

The lifting stroke is limited by a metallic stop.

# 7. Installation

- The valve must be installed in vertical position. Fluids are, therefore, freely drainable from the valve housing and the leakage chamber.

- Valve housings can be welded direct into the pipelines (completely dismantable valve insert).

- **Attention:** Observe welding instructions.

- Heights of installation and dismantling (see **chapter 7**).

## 7.1. Welding Instructions

**DA3+**

- Before welding of the valve, the valve insert must be dismantled from the housing. Careful handling to avoid damage to the parts is necessary **(see 11.1)**.
  It is not necessary to remove the lower shaft seal as it can be destroyed during dismantling

- Welding should only be carried out by certified welders (DIN EN ISO 9606-1). (Seam quality DIN EN ISO 5817).

- The welding of the valve housings must be undertaken in such a way that the valve body is not deformed.

- The preparation of the weld seam up to 3 mm thickness must be carried out as a square butt joint without air. (Consider shrinkage!)

- TIG orbital welding is best!

- After welding of the valve housing or of the mating flanges and after work at the pipelines, the corresponding parts of the installation and pipelines must be cleaned from welding residues and soiling before operation of the valves to avoid damage to the valves and seals.
  If these cleaning instructions are not observed, welding residues and dirt particles can settle in the valve and cause damage.

- Any damage resulting from the non-observance of these welding instructions is not subject to our guarantee.

- Welding directives for aseptic applications shall be drawn from the AWS/ANSI Directives and EHEDG Guidelines.

# 8. Dimensions / Weights

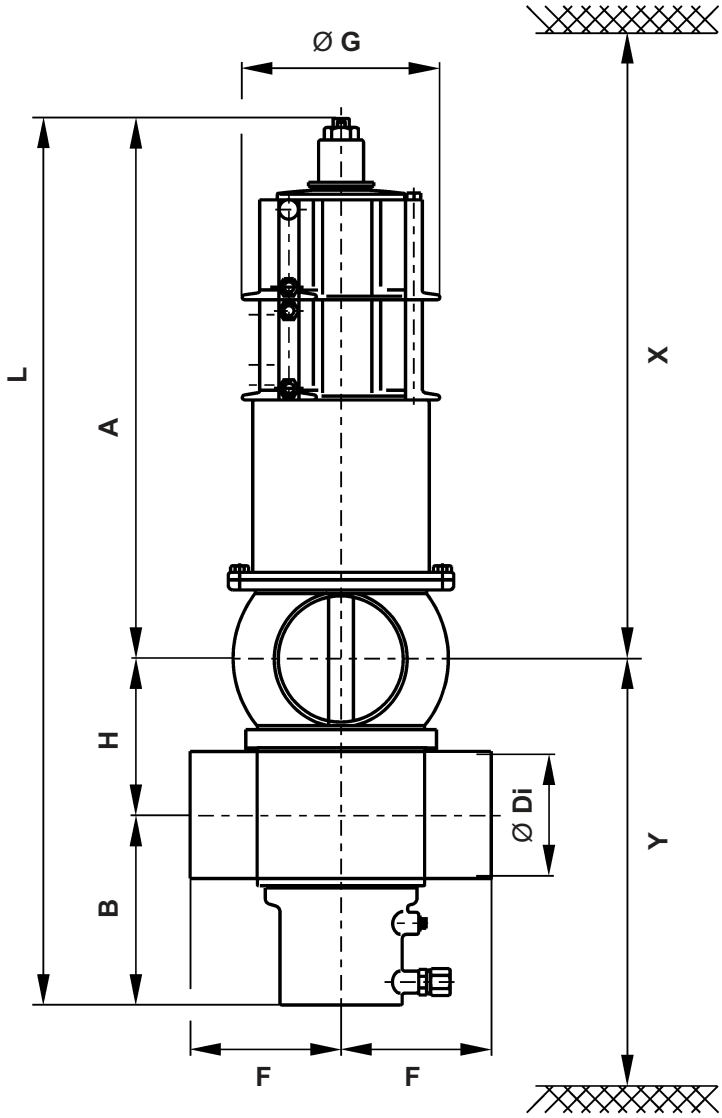


**Control Unit DELTA CU4**

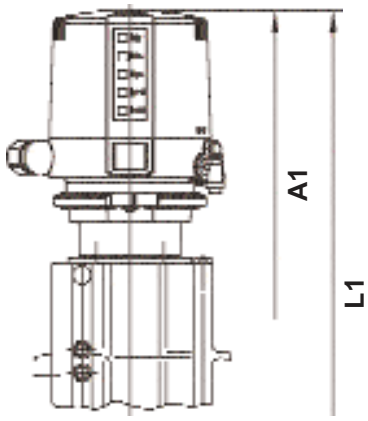


| Dimensions in mm | | | | | | | | | | inst. dimensions min.in mm | | weights in kg |
|---|---|---|---|---|---|---|---|---|---|---|---|---|
| **DN** | **A** | **A1** | **B** | **Ø Di** | **F** | **Ø G** | **H** | **L** | **L1** | **X** | **Y** | |
| 40 | 378 | 502 | 120 | 38 | 100 | 163 | 63 | 561 | 715 | 660 | 200 | 13,7 |
| 50 | 384 | 508 | 126 | 50 | 100 | 163 | 75 | 585 | 739 | 680 | 218 | 13,8 |
| 65 | 392 | 516 | 134 | 66 | 100 | 163 | 91 | 617 | 771 | 700 | 242 | 14,0 |
| 80 | 419 | 543 | 146 | 81 | 120 | 188 | 106 | 671 | 825 | 790 | 274 | 19,2 |
| 100 | 429 | 553 | 156 | 100 | 120 | 188 | 125 | 710 | 864 | 820 | 303 | 20,3 |
| 125 | 507 | 631 | 176 | 125 | 150 | 236 | 150 | 833 | 987 | 950 | 342 | 46,6 |
| 150 | 519 | 643 | 189 | 150 | 150 | 236 | 175 | 883 | 1037 | 1010 | 392 | 47,5 |
| **Inch** | | | | | | | | | | | | |
| 1,5” | 379 | 503 | 119 | 34,9 | 100 | 163 | 63 | 561 | 715 | 660 | 197 | 13,7 |
| 2” | 385 | 509 | 125 | 47,6 | 100 | 163 | 75 | 585 | 739 | 680 | 216 | 13,8 |
| 2,5” | 389 | 513 | 131 | 60,3 | 100 | 163 | 85 | 605 | 759 | 700 | 233 | 14,0 |
| 3” | 395 | 519 | 137 | 72,9 | 100 | 163 | 97 | 629 | 783 | 730 | 251 | 14,2 |
| 4” | 430 | 554 | 155 | 97,6 | 120 | 188 | 125 | 710 | 864 | 820 | 301 | 20,3 |
| | | | | | | | | | | | | |

# 9. Technical Data

## 9.1. General data

| | |
|---|---|
| product-wetted parts: | **1.4571, 1.4404** (DIN EN 10088) |
| other parts: | **1.4301**(DIN EN 10088) |
| seals: | |
| standard design: | **EPDM/ PTFE** |
| option: | **HNBR/ PTFE**<br>**FPM/ PTFE**<br>**VMQ/ PTFE** |
| actuator: | **PA 12 GF 30** |
| spray connection: | **PP** |
| max. line pressure: | **10 bar** |
| max. operating temperature: | **135°C EPDM, HNBR**<br>***VMQ, *FPM** |
| short-term load: | **140°C EPDM, HNBR**<br>***VMQ, *FPM**<br>*** (no steam)** |
| Tightening torque for stop screw **(11)** : | **15Nm** |
| Tightening torque for safety nuts **(42, 16)** at lower and upper valve shaft: | **40Nm** |
| cleaning connection (for hose) | |
| DN 40 - 100 / 1,5” - 4” : | **8x1mm** |
| DN 125 - 150 : | **10x1mm** |
| air connection (for hose): | **6x1mm** |
| max. pneumatic air pressure: | **10 bar** |
| min. pneumatic air pressure: | **6 bar** |

## 9.2. Compressed air quality: Quality class acc. to DIN/ISO 8573-1

| | |
|---|---|
| **content of solid particles:** | **quality class *3***<br>max. size of solid particles per m³<br>10000 of 0,5 µm < d < 1,0 µm<br>500 of 1,0 µm < d < 5,0 µm |
| **content of water:** | ***quality class 4***<br>max. dew point temperature + 3°C<br>For installations at lower temperatures or at higher altitudes, additional measures must be considered to reduce the pressure dew point accordingly. |
| **content of oil:** | ***quality class 1***<br>max. 0,01 mg/m³ |

**(The oil applied must be compatible with Polyurethane elastomer materials.)**

# 9. Technical Data

| 9.3. | Kvs values in $m^3$/ h | | | |
|---|---|---|---|---|
| | 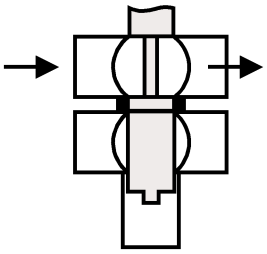 | 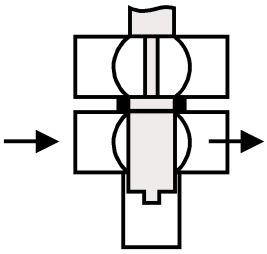 | 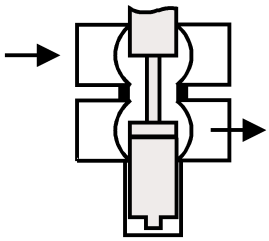 | 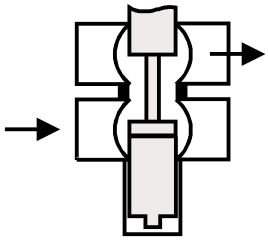 |
| **DN** | | | | |
| 40 | 57 | 46 | 23 | 25 |
| 50 | 120 | 95 | 42 | 45 |
| 65 | 219 | 148 | 69 | 78 |
| 80 | 296 | 200 | 120 | 130 |
| 100 | 505 | 320 | 164 | 170 |
| 125 | **800*** | **500*** | 300 | 330 |
| 150 | **1200*** | **700*** | 360 | 380 |
| **Inch** | | | | |
| 1,5” | 47 | 40 | 21 | 24 |
| 2” | 100 | 73 | 43 | 46 |
| 2,5” | 170 | 122 | 59 | 66 |
| 3” | 213 | 160 | 71 | 80 |
| 4” | 490 | 294 | 150 | 160 |
| | | | | |

*** no measuring value**

| 9.4. | | Air consumption actuator | Air consumption seat lift actuator | | Closing times in sec. | |
|---|---|---|---|---|---|---|
| **DN** | **Inch** | NL / stroke valve open | NL / stroke upper seat lift | NL / stroke lower seat lift | 1 m | 10 m |
| 40 | 1,5” | 0,9 | 1,1 | 0,3 | 1,5 | 2,5 |
| 50 | 2” | 1,1 | 1,3 | 0,3 | 1,5 | 2,5 |
| 65 | 2,5” | 1,3 | 1,5 | 0,3 | 1,5 | 2,5 |
| | 3” | 1,3 | 1,5 | 0,3 | 1,5 | 2,5 |
| 80 | | 2,3 | 2,6 | 0,45 | 3,0 | 4,0 |
| 100 | 4” | 2,3 | 2,6 | 0,45 | 3,0 | 4,0 |
| 125 | | 6,4 | 7,0 | 1,1 | 5,0 | 6,0 |
| 150 | | 6,4 | 7,0 | 1,1 | 8,0 | 9,0 |

# 9. Technical Data

## 9.5. Valve stroke / Opening cross section

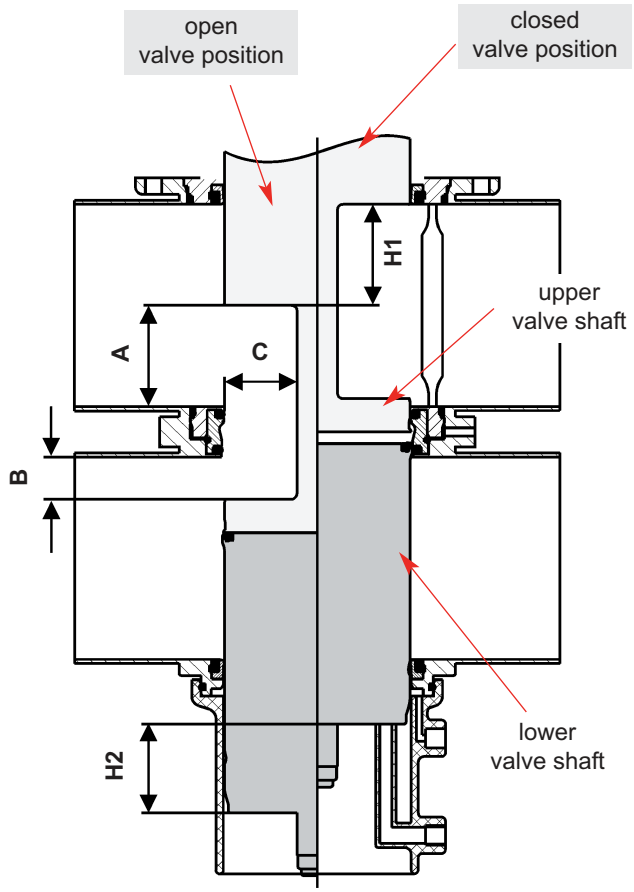


Table to fig. 9.5.
Dimensions in mm

| DN | A | B | C | stroke **H1** upper shaft | stroke **H2** lower shaft |
|---|---|---|---|---|---|
| 40 | 6 | 3 | 21,2 | 32 | 26 |
| 50 | 11 | 10 | 21,2 | 39 | 33 |
| 65 | 21 | 16 | 21,2 | 45 | 39 |
| 80 | 31 | 21 | 36,2 | 50 | 44 |
| 100 | 50 | 21 | 36,2 | 50 | 44 |
| 125 | 63 | 33 | 55,2 | 62 | 56 |
| 150 | 88 | 33 | 55,2 | 62 | 56 |
| **Inch** | | | | | |
| 1,5” | 6 | 3 | 21,2 | 32 | 26 |
| 2” | 11 | 10 | 21,2 | 39 | 33 |
| 2,5” | 15 | 16 | 21,2 | 45 | 39 |
| 3” | 27 | 16 | 21,2 | 45 | 39 |
| 4” | 50 | 21 | 36,2 | 50 | 44 |

# 10. Maintenance

Scan for DA3+ Valve Maintenance Video

The maintenance intervals are different depending on the application and must be determined by the operator himself carrying out **temporary checks**.

- For the dismantling of the valve, compressed air is not required.

- Required tools:
- 1 x wrench SW13
- 2 x wrench SW17
- 2 x wrench SW24
- disassembly and assembly tool for the lower shaft seal, **ref.-No. 000 51-13-100/17; H171889**

- For the valve maintenance we supply complete seal kits (see spare parts lists).

- Replacement of seals, see Service Instructions.

- To simplify the installation of the middle seal, the following assembly tools are available.

**Assembly tool for middle seal (see page 21)**

| DN | Inch | Designation | Reference number |
|---|---|---|---|
| 40<br>50<br>65 | 1,5”<br>2”<br>2,5”<br>3” | DA3 - 62 | 51 - 13 - 210/17<br>H207310 |
| 80<br>100 | 4” | DA3 - 92 | 51 - 13 - 211/17<br>H207311 |
| 125*<br>150* | | D3 - 138 | 51 - 13 - 676/17<br>H151824 |

**Provide all seals with a thin layer of grease before their installation (see lubrication chart )!**

**Recommendation:**
**APV assembly grease for EPDM, HNBR and FPM (Viton)**
(0,75 kg/ tin - ref.-No. 000 70-01-019/93)
(60 g/ tube - ref.-No. 000 70-01-018/93)

**APV assembly grease for VMQ (Silikon)**
(0,60kg/ tin - ref.-No. 000 70-01-017/93)
(60 g/ tube - ref.-No. 000 70-01-016/93)

**Recommendation for actuator:**
APV pneumatic grease:
(25 ml-tube - ref.-No. 000 70-01-008/93 )

- Assembly of valve according to Service Instructions.

# 11. Service Instructions

The item numbers refer to the spare parts drawings
DIN design: **RN 01.053.73**
Inch design: **RN 01.053.73-1**

## 11.1. Dismantling from the line system

1. Shut off the line pressure in the product and cleaning lines, discharge the pipes if possible.

2. Remove the pneumatic air line.

3. Release the nut of the proximity switch holder **(13)** and pull off the proximity switch (remove CU if necessary).

4. Remove the flange screws **(7)** at the spring cylinder **(8)**.

5. Screw in one flange screw into the threaded bore of the spring cylinder to lift the complete valve insert. Do **not** remove the screw which will help to re-install the valve insert.

6. Carefully lift the valve insert vertically out of the valve housing.

# 11. Service Instructions

fig. 11.2.

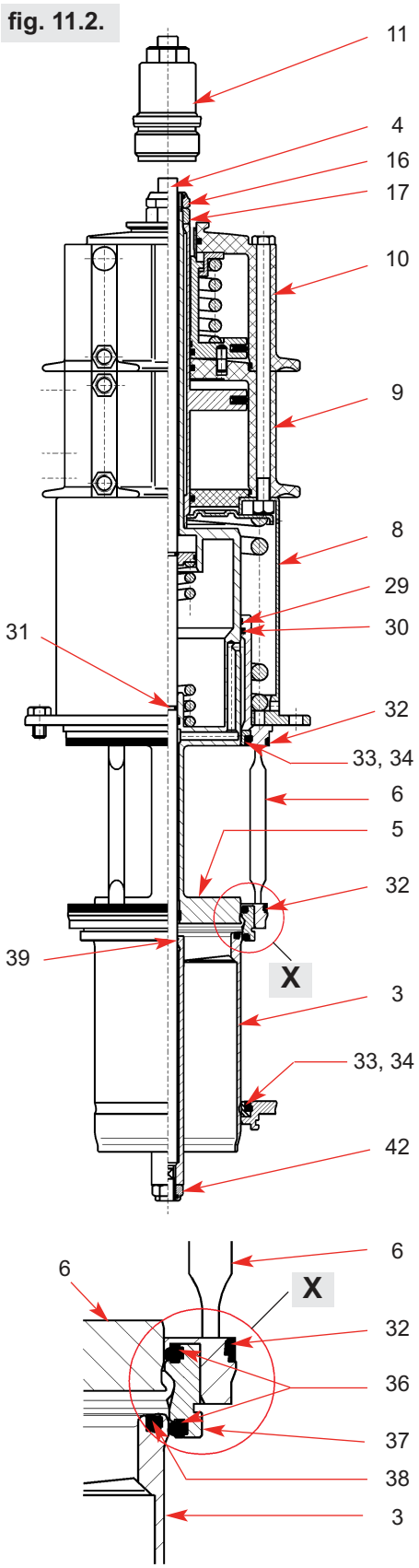


## 11.2. Dismantling of product-wetted parts (service, fig. 11.2. )

1. Remove the lower and upper housing seal **(32)** from the valve seat **(6)**.
2. Release the lower safety nut **(42)**. Holding the lower shaft **(3)** with a wrench SW17 prevents it from turning.
3. After removal of the nut, draw off the lower shaft.
4. Take a pointed tool to stick into the middle seal **(38)** and to pull it out of the groove. Take the o-ring **(39)** out of the groove.
5. Unscrew the stop screw **(11)**.
6. Lift the guide rod **(4)** out to the top and remove the o-ring **(31)**.
7. Remove the safety nut **(16)**. By holding the safety disc **(17)** with a wrench SW24 it is prevented from turning. Remove the safety disc.
8. Lift off the spring cylinder **(8)** with main cylinder **(9)** and seat lift cylinder **(10)**. (Service of main and seat lift cylinder, see 11.3).
9. Press the upper valve shaft **(5)** with seat ring **(37)** to the bottom out of the valve seat **(6)**.
10. Slide the seat ring **(37)** over the compensating piston of the upper valve shaft.
11. Remove the seat seals **(36)** from the groove. (see fig. **X**)
12. **Dismantling of upper shaft seal (33, 34)**
    Take a peaked object to stick into the seat seal **(33)** and pull it out of the valve seat. Afterwards, remove the PTFE seal **(34)**.
13. **Dismantling of lower shaft seal (33, 34) from the housing**
    Take the metal point of the disassembly tool to stick into the seat seal **(33)** and pull it off to the top.
    Afterwards, remove the PTFE seal **(34)** to the top through the housing by means of the mandril of the assembly tool.
14. Remove the seal ring **(30)** and guide band **(29)** from the groove of the valve seat **(6)**.

# 11. Service Instructions

**DA3+ actuator**

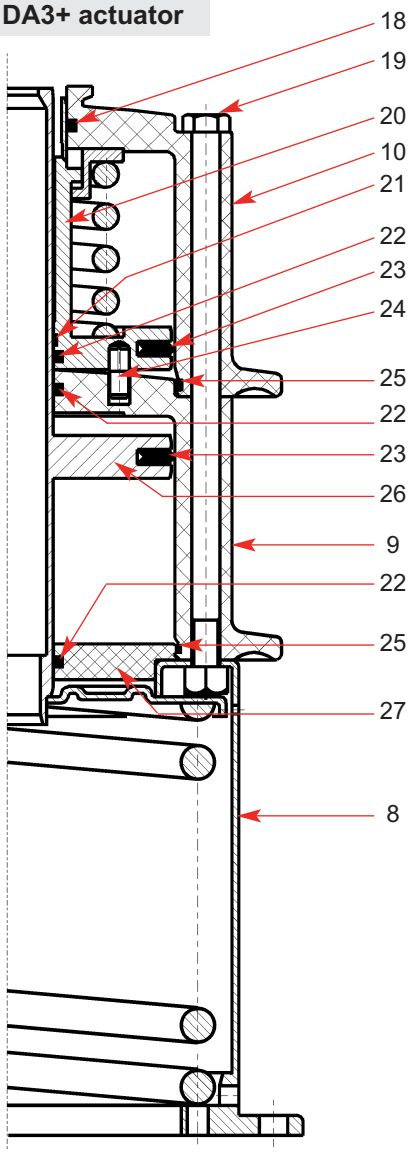


The spring cylinder **(8)** is preloaded by spring force.
**Opening of the spring cylinders is strictly forbidden.**
**D a n g e r  t o  l i f e !**

## 11.3. Actuator / Cylinder (service)

1. The actuator (seat lift cylinder **(10)**, main cylinder **(9)** and spring cylinder **(8)** must be dismantled from the valve insert as described in **11.2 1.-8.**

2. Remove the hexagon screws **(19)**.
   Lift the seat lift cylinder with the main cylinder from the spring cylinder.

### 11.3.1. Dismantling of seals and disassembly of the seat lift and main cylinder

1. Lift the seat lift cylinder **(10)** from the main cylinder **(9)**.
   Push the piston rod **(20)** out of the seat lift cylinder.

2. Remove the piston seal **(23)**, quadrings **(18, 22)**, guide band **(21)** and o-ring **(25)**.

3. Clean the seat lift cylinder and the piston rod.

4. Press the piston of the main cylinder **(26)** with cover **(27)** out of the main cylinder. Slide the cover from the piston.

5. Remove the quadrings **(22)**, o-ring **(25)** and piston seal **(23).**

6. Clean the main cylinder, cover and piston.

### 11.3.2. Installation of seals and assembly of the seat lift and main cylinder

1. Slightly grease all seals.
   **Attention:** See to all seals and bearing surfaces in the seat lift cylinder and main cylinder being greased sufficiently!
   **(see lubrication chart: RN 260.064-1)**
   Use appropriate pneumatic grease.
   **Recommendation for the actuator (main cylinder):**
   APV pneumatic grease: (25 ml tube - ref.-No. 000-70-01-008/93)

2. Insert the seals into their corresponding grooves.

3. Insert the piston rod **(20)** in the seat lift actuator.

4. Slide the piston of the main cylinder **(26)** into the main cylinder until it stops.

5 Slide the cover **(27)** over the piston **(26)**. Press the cover into the main cylinder.

6. Place the seat lift cylinder on the main cylinder:
   The cylindrical dowel pin **(24)** must engage in the bore of the housing of the main cylinder.

7. Place the main cylinder with the seat lift cylinder on the spring cylinder **(8)**.

8. Insert the hexagon screws **(19)** and tighten them crosswise.

# 11. Service Instructions

fig. 11.4.

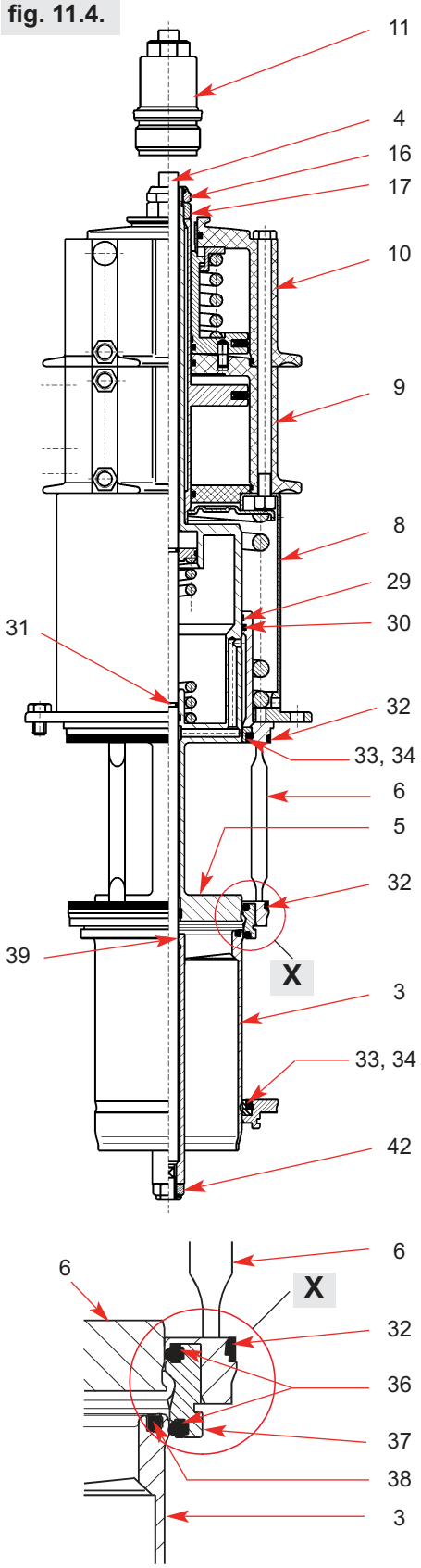


## 11.4. Installation of product-wetted seals and assembly of the valve DELTA DA3+

**Attention:** See to all seals and bearing surfaces in the product area being slightly greased before their installation (see **lubrication chart: RN 260.064-1**).

1. Install the lower shaft seal **(33, 34)** in the lower housing flange (see **page 19**).
2. Place the quadring **(30)** and the guide band **(29)** in the valve seat **(6)**.
3. Install the upper shaft seal **(33, 34)** in the valve seat. Insert the PTFE ring **(34)**, at first. Then press the elastomer ring **(33)**, the wide side to the front, into the groove between PTFE seal and valve seat.
4. Install the upper and lower housing seals **(32)**.
5. Press the upper and lower seat seal **(36)** into the seat ring **(37)**.

**Attention:** **The seal shoulder must fit properly into the groove (see fig. X).**

6. Slide the seat ring **(37)** from the top over the compensating piston of the upper valve shaft **(5)**.
7. Slide the valve seat **(6)** over the compensating piston of the upper valve shaft **(5)** in the same way.
8. Insert the upper valve shaft **(5)** with seat ring **(37)** and valve seat **(6)** through the actuator until it stops.
9. Fasten the valve shaft with safety disc **(17)** and safety nut **(16)**. Holding the safety disc with a wrench SW24 prevents the safety nut from turning.
   **Tightenting torque: Md = 40 Nm**
10. Insert the middle seal **(38)** into the lower shaft **(3)** by means of the assembly tool (see **page 21**).

    **Assembly without assembly tool:**
    Press the slightly greased seal at four spots into the groove. Then press the four loops in by means of an even object. Vent the seal groove at this occasion.
11. Insert the o-ring **(39)** in the lower valve shaft.
12. Install the o-ring **(31)** on the guide rod **(4)**.
13. Slide in the guide rod from the top through the actuator until it stops.
14. Slide the lower valve shaft on the guide rod and fasten it with the safety nut **(42)**.

    **Tightening torque: Md = 40 Nm**
    **Attention:** **Check the position of the lower seat seal (36) (section X).**
15. Screw in the stop screw **(11)** until it stops.
    **Tightening torque: Md = 15 Nm**

# 11. Service Instructions

## 11.5. Installation of the valve insert

1. Carefully place the valve insert in the valve housing until the screw stops **(see 11.1.5.)**.
2. Remove the stop screw and carefully press the valve insert into the housing.
3. Enter screws **(7)** and tighten them crosswise.
4. Install the pneumatic air and cleaning lines.

| | | |
|---|---|---|
| **upper air connection A1** | : | lifting of lower shaft |
| **medium air connection B** | : | valve open |
| **lower air connection A2** | : | lifting of upper shaft |

5. Installation of valve position indication.
   Release nut and push the proximitiy switches into the sleeve until they stop.
6. Fix the proximity switches by the nut.
   (Install CU if necessary.)
7. The spray connection **(1)** can be disassembled from the housing **(2)** by levering it by means of a wide screw driver.

# 12. Disassembly and Assembly Tool

**Seal 33, 34**

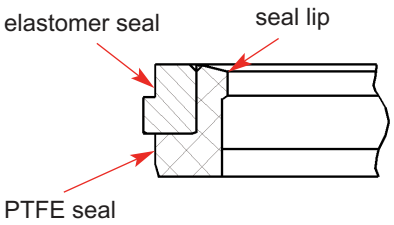


**Assembly tool**

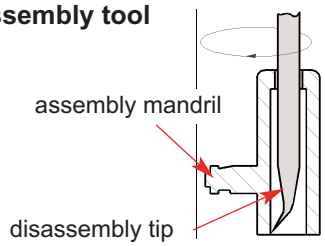


## 12.1. Assembly of lower shaft seal, pos. 33, 34

For a simple disassembly and assembly of the lower shaft seal a universal tool **(ref.-No. 000 51-13-100/17)** can be used. The use of this tool is especially recommended for valves of the small series (DN 40-65, 1,5”-3”), as access to the lower shaft seal from the top is impossible as a result of the narrow seat.

**Attention:**
Do not damage the seal lip of the PTFE seal during assembly. To avoid injuries the disassembly tip must be covered by the assembly mandril if not used.

### 12.1.1. Assembly of the PTFE seal (fig. 1,2)

1. Press the PTFE ring into an oval shape.
2. Introduce the PTFE ring from the top by means of the assembly tool, the wide side to the front, through the intermediate ring of the housing into the lower housing **(fig. 1)**.
3. Pull the PTFE ring into a round shape by means of the assembly mandril **(fig. 2/I)** and press it into the groove - **do not knock or beat (fig. 2/II).**

### 12.1.2. Assembly of the elastomer seal (fig. 1,3,4)

1. Slightly grease the seal.
2. Insert the elastomer from the top by means of the assembly tool, the wide side to the front, through the intermediate ring of the housing into the lower housing **(fig. 1)**.
3. Fix the seal by means of the groove of the assembly mandril **(fig. 3/I)**.
4. Press in the elastomer at one spot between the housing flange and the PTFE **(fig. 3/II)**.
5. By sliding the assembly mandril around the seal, the seal is inserted completely into the groove **(fig. 4)**. See to an even fit of the elastomer seal in the groove.

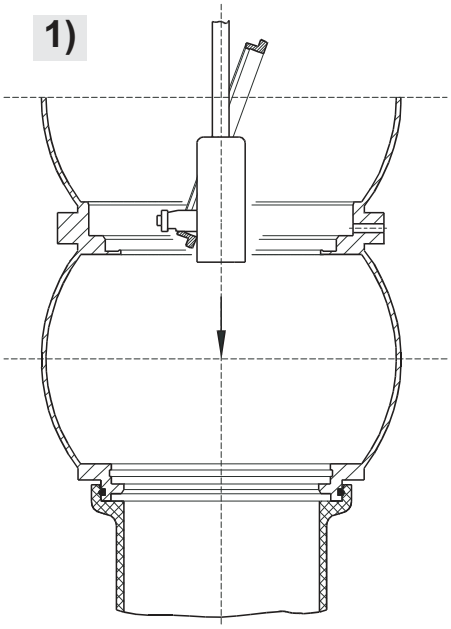


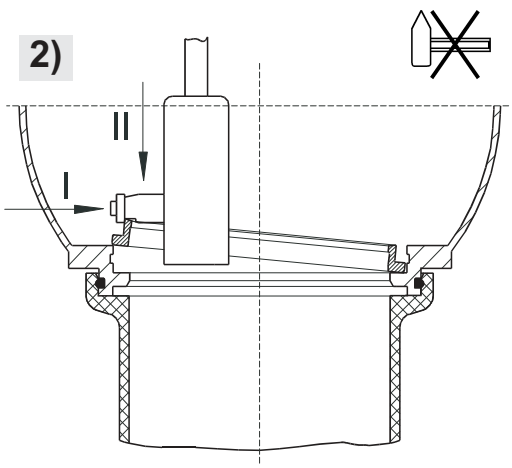


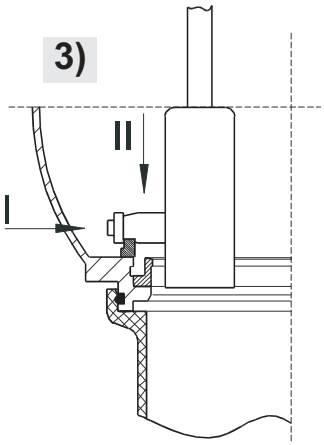


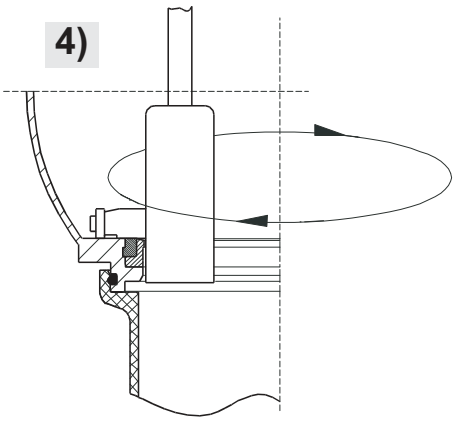

# 13. Assembly Tool for Middle Seal

fig. 13.1.

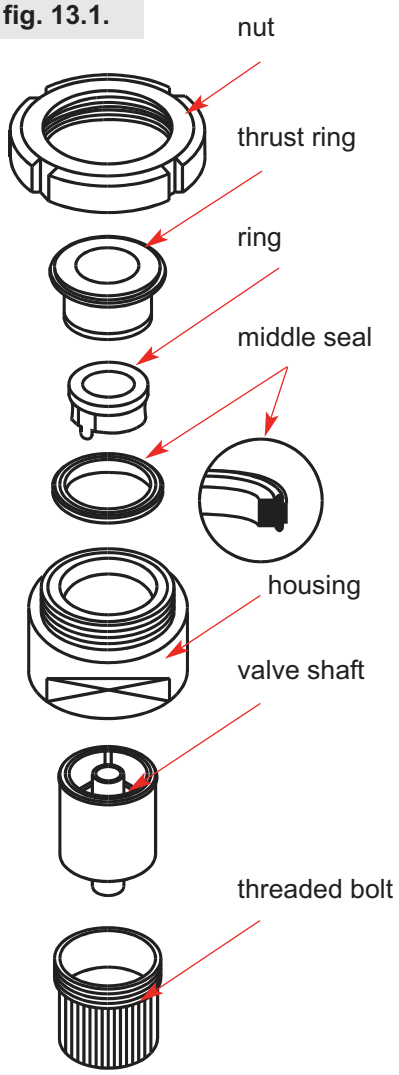


**The assembly tool consists of:**

- nut
- thrust ring
- ring with vent nose
- housing
- threaded bolt

**Installation of the middle seal in the valve shaft (fig. 13.1)**

1. Insert the valve shaft into the housing in such a way that the seal groove is in the housing.
2. Clamp the shaft into the housing by means of the threaded bolt. Clamp the housing into a vice.
3. Slightly grease the middle seal with APV food-grade grease. Then install the seal on the ring.
4. Introduce the ring with the installed seat seal into the housing. The vent nose is positioned in the seal groove.
5. Insert the thrust ring around the ring in the housing. Screw on the nut and tighten it with a hook spanner until it stops.
6. Release the nut. Take ring and thrust ring off the housing.
7. Take housing out of the vice, take off the threaded bolt. Detach the valve shaft from the housing.

**Check the even fit of the middle seal.**

fig. 13.2.

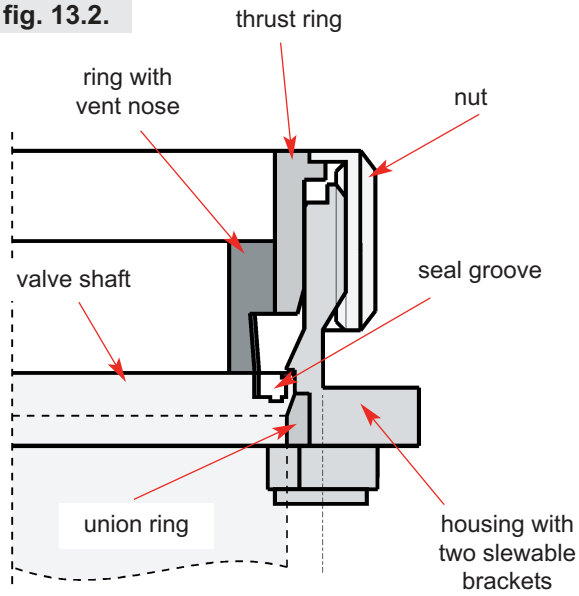


| Assembly tool for middle seal (fig. 13.1.) | | | |
|---|---|---|---|
| **DN** | **Inch** | **Designation** | **Reference number** |
| **40<br>50<br>65** | **1,5”<br>2”<br>2,5”<br>3”** | **DA3 - 62** | **51 - 13 - 210/17<br>H207310** |
| **80<br>100** | **4”** | **DA3 - 92** | **51 - 13 - 211/17<br>H207311** |
| **125*<br>150*** | | **D3 - 138**<br>(fig. 12.2.) | **51 - 13 - 676/17<br>H151824** |

* **For the valves of the series DN 125, 150 the assembly tool in the old design must be used. See fig. 13.2.**

# 14. Trouble Shooting

| ***Failure*** | ***Remedy*** |
|---|---|
| Leakage at the upper housing flange | **Replace upper housing seal (32).** |
| Leakage from the leakage bore between the connecting ports | **Replace lower housing seal (32) and seat seals (36).** |
| Leakage from the bore of the spring cylinder **(8)** | **Replace upper shaft seal (33, 34) and seals in flushing chamber (29, 30).** |
| | |
| Liquids from the drain pipe | **To be able to make a detailed diagnosis, remove the drain pipe (1).** |
| ***Valve closed and pressure in the upper housing*** | |
| Leakage at the inner side of the lower valve shaft **(3)** | **Replace upper seat seal (36).** |
| Leakage at the inner tube of the lower valve shaft **(3)** | **Replace upper shaft seal (33, 34).** |
| ***Valve closed and pressure in the lower housing*** | |
| Leakage at the inner side of the lower valve shaft **(3)** | **Replace lower seat seal (36).** |
| Leakage at the outer side of the lower valve shaft **(3)** | **Replace lower shaft seal (33, 34).** |
| ***Open valve position*** | |
| Leakage at the inner side of the lower valve shaft **(3)** | **Replace middle seal (38).** |

**!** ***When damaged seals are changed, generally all seals should be replaced. For valve service actions we supply complete seal kits (see spare parts lists).***

# 15. Spare Parts Lists and Lubrication Chart

The reference numbers of the spare parts for the different valve designs and sizes are included in the attached spare parts drawings with corresponding lists.

Please indicate the following data to place an order for spare parts:

- number of required parts
- reference number
- designation.

Data are subject to change

Weitergabe sowie Vervielfältigung dieser Unterlage, Verwertung und Mitteilung ihres Inhalts nicht gestattet, soweit nicht schriftlich zugestanden. Verstoß verpflichtet zum Schadensersatz und kann strafrechtliche Folgen haben (Paragraph 18 UWG, Paragraph 106 UrhG). Eigentum und alle Rechte, auch für Patenterteilung und Gebrauchsmustereintragung, vorbehalten. SPX Flow Technology Rosista GmbH.

Ersatzteilliste: spare parts list

# Doppelsitzventil DA3 DN40 - 150 ; 1.5 "- 4"
# Double seat valve DA3 DN40 - 150 ; 1.5" - 4"

| | | | | |
|---|---|---|---|---|
| Datum: | 17.01.13 | 08.05.13 | 04.03.14 | 18.09.14 |
| Name: | Trytko | Trytko | Trytko | Trytko |
| Geprüft: | | | | |

| | | | | |
|---|---|---|---|---|
| Datum: | 21.09.16 | | | |
| Name: | C.Keil | | | |
| Geprüft: | | | | |

APV
SPX Flow Technology Rosista GmbH
D-59425 Unna Germany



**RN 01.053.73**

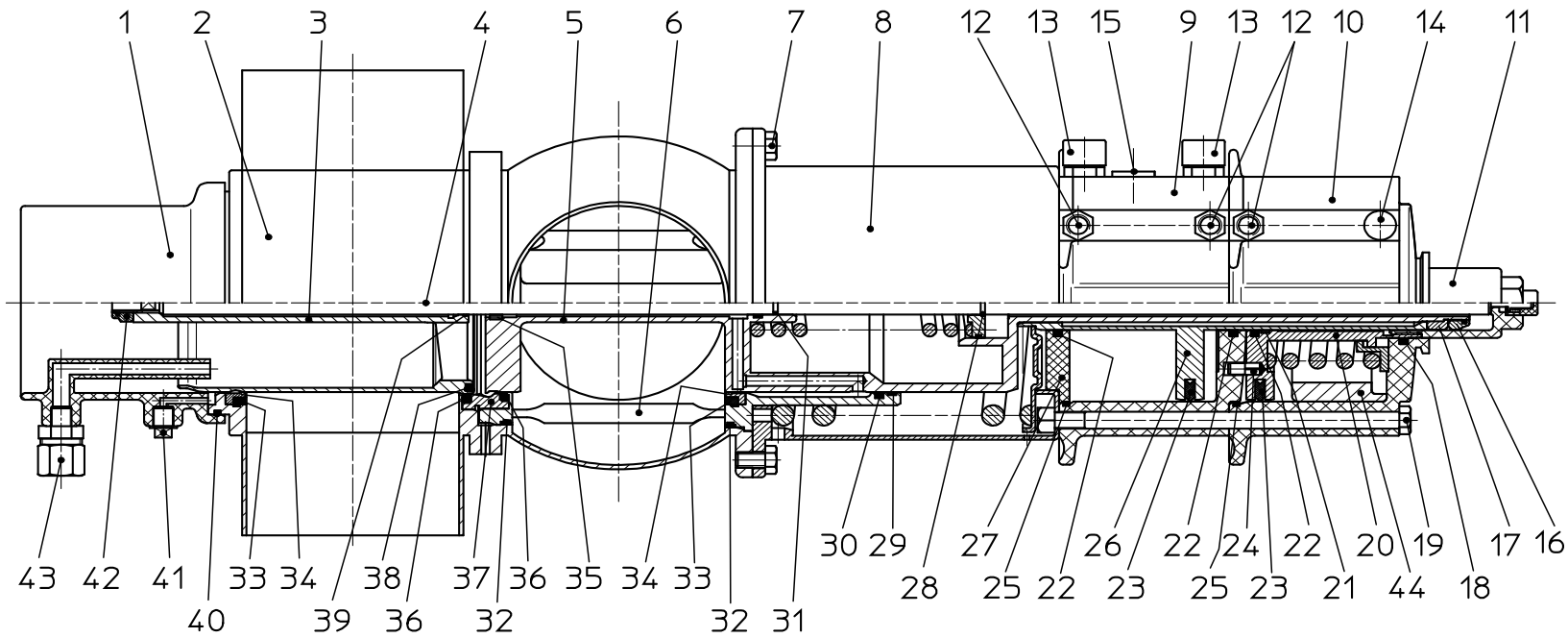


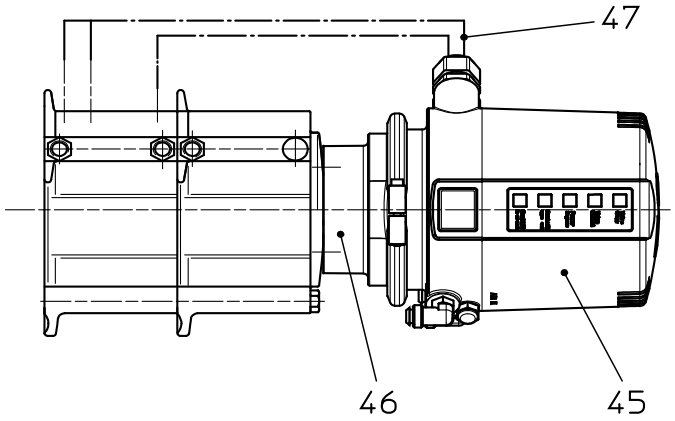

Weitergabe sowie Vervielfältigung dieser Unterlage, Verwertung und Mitteilung ihres Inhalts nicht gestattet, soweit nicht schriftlich zugestanden. Verstoß verpflichtet zum Schadensersatz und kann strafrechtliche Folgen haben (Paragraph 18 UWG, Paragraph 106 UrhG). Eigentum und alle Rechte, auch für Patenterteilung und Gebrauchsmustereintragung, vorbehalten. SPX Flow Technology Rosista GmbH.

Ersatzteilliste: spare parts list

# Doppelsitzventil DA3 DN40 - 150 ; 1.5 "- 4"
# Double seat valve DA3 DN40 - 150 ; 1.5" - 4"

| | | | | |
|---|---|---|---|---|
| Datum: | 17.01.13 | 08.05.13 | 04.03.14 | 18.09.14 |
| Name: | Trytko | Trytko | Trytko | Trytko |
| Geprüft: | | | | |
| Datum: | | | | |
| Name: | | | | |
| Geprüft: | | | | |

SPX Flow Technology Rosista GmbH
D-59425 Unna Germany

Blatt 2 von 11

**RN 01.053.73**

| pos. item | Menge quantity | Beschreibung description | Material material | DN40 WS-Nr. ref.-no. | 1,5" WS-Nr. ref.-no. | DN50 WS-Nr. ref.-no. | 2" WS-Nr. ref.-no. | DN65 WS-Nr. ref.-no. | 2,5" WS-Nr. ref.-no. |
|---|---|---|---|---|---|---|---|---|---|
| 1 | 1 | Spritz Anschluss<br>CIP connection | PP GF30<br>HOSTAC | 09-40-114/93<br>H168321 | | | | | |
| 2 | 1 | Gehäuse<br>Housing DA31 1+2S | 1.4404 | 16-61-382/47<br>H176634 | 16-61-407/47<br>H176629 | 16-61-432/47<br>H176635 | 16-61-457/47<br>H176630 | 16-61-482/47<br>H176636 | 16-61-507/47<br>H176631 |
| | 1 | Gehäuse<br>Housing DA32 1+2+3S | 1.4404 | 16-62-382/47<br>H176645 | 16-62-407/47<br>H176640 | 16-62-432/47<br>H176646 | 16-62-457/47<br>H176641 | 16-62-482/47<br>H176647 | 16-62-507/47<br>H176642 |
| | 1 | Gehäuse<br>Housing DA33 1+2+3S | 1.4404 | 16-63-382/47<br>H176655 | 16-63-407/47<br>H176650 | 16-63-432/47<br>H176656 | 16-63-457/47<br>H176651 | 16-63-482/47<br>H176657 | 16-63-507/47<br>H176652 |
| | 1 | Gehäuse<br>Housing DA34 1+2+3+4S | 1.4404 | 16-64-382/47<br>H176320 | 16-64-407/47<br>H176325 | 16-64-432/47<br>H176321 | 16-64-457/47<br>H176326 | 16-64-482/47<br>H176322 | 16-64-507/47<br>H176327 |
| 3 | 1 | Schaft unten<br>Lower valve shaft | 1.4404 | 16-22-393/42<br>H176351 | | 16-22-443/42<br>H176356 | | 16-22-493/42<br>H176368 | 16-22-518/42<br>H176363 |
| 4 | 1 | Zugstange<br>Guide rod | 1.4404 | 16-24-392/42<br>H176393 | | 16-24-442/42<br>H176394 | | 16-24-492/42<br>H176396 | 16-24-517/42<br>H176395 |
| 5 | 1 | Schaft oben<br>Upper valve shaft | 1.4404 | 16-22-210/42<br>H149299 | | 16-22-211/42<br>H149300 | | 16-22-213/42<br>H149302 | 16-22-212/42<br>H149301 |
| 6 | 1 | Ventilsitz mit Spülkammer<br>Valve seat with flushing chamber | 1.4404 | 16-37-394/43<br>H176344 | | 16-37-444/43<br>H176345 | | 16-37-494/43<br>H176347 | 16-37-519/43<br>H176346 |
| 7 | 4 | Skt. Schraube<br>Hex. Screw DIN EN 24017-M8x14-A2-70 | 1.4301 | 65-01-079/15<br>H78768 | | | | | |
| 8 | 1 | Federzylinder<br>Spring actuator | 1.4301 | 16-30-500/17<br>H323172 | | | | | |
| 9 | 1 | Hauptzylinder<br>Main actuator | Vestamid | 15-31-239/93<br>H151072 | | | | | |
| 10 | 1 | Anlüftzylinder<br>Seat lifting device | Vestamid | 16-30-225/93<br>H151130 | | | | | |
| 11 | 1 | Anschlagschraube<br>Stop sleeve | Vestamid | 16-28-260/93<br>H176400 | | | | | |
| 12 | 3 | W-Verschraubung<br>Angular union G1/8" 6x1 | 1.4301 | 08-60-750/93<br>H208825 | | | | | |
| 13 | 2 | Initiatorhalterung<br>Mounting block | PA6.6 schwarz | 15-33-918/93<br>H154913 | | | | | |

Weitergabe sowie Vervielfältigung dieser Unterlage, Verwertung und Mitteilung ihres Inhalts nicht gestattet, soweit nicht schriftlich zugestanden. Verstoß verpflichtet zum Schadensersatz und kann strafrechtliche Folgen haben (Paragraph 18 UWG, Paragraph 106 UrhG). Eigentum und alle Rechte, auch für Patenterteilung und Gebrauchsmustereintragung, vorbehalten. SPX Flow Technology Rosista GmbH.

Ersatzteilliste: spare parts list

# Doppelsitzventil DA3 DN40 - 150 ; 1.5 "- 4"
# Double seat valve DA3 DN40 - 150 ; 1.5" - 4"

| | | | | |
|---|---|---|---|---|
| Datum: | 17.01.13 | 08.05.13 | 04.03.14 | 18.09.14 |
| Name: | Trytko | Trytko | Trytko | Trytko |
| Geprüft: | | | | |
| Datum: | | | | |
| Name: | | | | |
| Geprüft: | | | | |

APV
SPX Flow Technology Rosista GmbH
D-59425 Unna Germany

Blatt 3 von 11

**RN 01.053.73**

| pos. item | Menge quantity | Beschreibung description | Material material | DN40 WS-Nr. ref.-no. | 1,5" WS-Nr. ref.-no. | DN50 WS-Nr. ref.-no. | 2" WS-Nr. ref.-no. | DN65 WS-Nr. ref.-no. | 2,5" WS-Nr. ref.-no. |
|---|---|---|---|---|---|---|---|---|---|
| 14 | 1 | Entlüftungsstopfen G1/8"<br>Venting plug | PE-Hard/Yellow | 08-60-005/93<br>H16218 | | | | | |
| 15 | 1 | Verschlußkappe ø11,1x5<br>Cap | PVC | 08-05-066/93<br>H154816 | | | | | |
| 16 | 1 | Sicherungsmutter<br>Stop nut | 1.4301 | 65-50-137/15<br>H147640 | | | | | |
| 17 | 1 | Sicherungsscheibe<br>Lock washer | 1.4301 | 67-03-001/15<br>H147639 | | | | | |
| 18 | 1 | Quadring Q4221-N7004<br>Quadring 36x3,53 | NBR | 58-01-237/83<br>H148386 | | | | | |
| 19 | 4 | Skt. Schraube DIN EN 24017-A2-70<br>Hex. Screw | 1.4301 | 65-01-114/15<br>M8x156 H152060 | | | | | |
| 20 | 1 | Kolbenstange Anlüftzylinder kpl.<br>Piston shaft for seat lifting device cpl. | 1.4301 | 16-29-065/17<br>H149396 | | | | | |
| 21 | 1 | Führungsband<br>PTFE driving band | Turcite 51 | 08-39-187/93<br>H147972 | | | | | |
| 22 | 3 | Quadring Q4216-N7004<br>Quadring 28,1x3,53 | NBR | 58-01-236/83<br>H148385 | | | | | |
| 23 | 2 | Kolbendichtung<br>Piston seal | NBR | 58-01-760/83<br>H76868 | | | | | |
| 24 | 1 | Zylinderkerbstift 6x 14,8<br>Cyl. Pin | 1.4305 | 67-15-055/12<br>H147811 | | | | | |
| 25 | 2 | O-Ring<br>O-ring | NBR | 58-06-372/83<br>OR 82,22x2,62 H150893 | | | | | |
| 26 | 1 | Kolben Hauptzylinder<br>Piston for main actuator | 1.4301 | 16-29-070/12<br>H149389 | | | | | |
| 27 | 1 | Deckel Hzyl.<br>Cover for main actuator | PA12 | 16-00-209/93<br>H149352 | | 16-00-208/93<br>H149351 | | 16-00-207/93<br>H149350 | |
| 28 | 1 | Sprengring<br>Retainer ring | 1.4310 | 08-39-083/13<br>H14883 | | | | | |
| 29 | 1 | Führungsband<br>PTFE driving band | | 08-39-198/93<br>H150892 | | | | | |

Weitergabe sowie Vervielfältigung dieser Unterlage, Verwertung und Mitteilung ihres Inhalts nicht gestattet, soweit nicht schriftlich zugestanden. Verstoß verpflichtet zum Schadensersatz und kann strafrechtliche Folgen haben (Paragraph 18 UWG, Paragraph 106 UrhG). Eigentum und alle Rechte, auch für Patenterteilung und Gebrauchsmustereintragung, vorbehalten. SPX Flow Technology Rosista GmbH.

Ersatzteilliste: spare parts list

# Doppelsitzventil DA3 DN40 - 150 ; 1.5 "- 4"
# Double seat valve DA3 DN40 - 150 ; 1.5" - 4"

| | | | | |
|---|---|---|---|---|
| Datum: | 17.01.13 | 08.05.13 | 04.03.14 | 18.09.14 |
| Name: | Trytko | Trytko | Trytko | Trytko |
| Geprüft: | | | | |
| Datum: | | | | |
| Name: | | | | |
| Geprüft: | | | | |

SPX Flow Technology Rosista GmbH
D-59425 Unna Germany

Blatt 4 von 11

**RN 01.053.73**

| pos. item | Menge quantity | Beschreibung description | Material material | DN40 WS-Nr. ref.-no. | 1,5" WS-Nr. ref.-no. | DN50 WS-Nr. ref.-no. | 2" WS-Nr. ref.-no. | DN65 WS-Nr. ref.-no. | 2,5" WS-Nr. ref.-no. |
|---|---|---|---|---|---|---|---|---|---|
| 30 | 1 | Quadring<br>Quadring Q4230-N7502 | EPDM | 58-01-329/63<br>H150898 | | | | | |
| 31 | 1 | O-Ring<br>O-ring OR 9,25x1,78 | EPDM<br>FDA-konform | 58-06-029/64<br>H148388 | | | | | |
| 32 | 2 | Gehäusedichtung<br>Housing seal | EPDM<br>FDA-konform | 58-33-542/93<br>H77543 | | | | | |
| | 2 | Gehäusedichtung<br>Housing seal | FPM<br>FDA-konform | 58-33-542/73<br>H77542 | | | | | |
| | 2 | Gehäusedichtung<br>Housing seal | HNBR<br>FDA-konform | 58-33-542/33<br>H170075 | | | | | |
| 33 | 2 | Tellerdichtung<br>Seat seal | EPDM<br>FDA-konform | 58-33-493/93<br>H77515 | | | | | |
| | 2 | Tellerdichtung<br>Seat seal | FPM<br>FDA-konform | 58-33-493/73<br>H77514 | | | | | |
| | 2 | Tellerdichtung<br>Seat seal | HNBR<br>FDA-konform | 58-33-493/33<br>H166678 | | | | | |
| | 2 | Tellerdichtung<br>Seat seal | VMQ<br>FDA-konform | 58-33-493/13<br>H77513 | | | | | |
| 34 | 2 | Schaftdichtung<br>Shaft seal | PTFE | 58-33-016/23<br>H149620 | | | | | |
| 35 | 1 | Führungsring<br>Quide ring | PTFE<br>25%Kohle | 08-39-080/93<br>H14880 | | | | | |
| 36 | 2 | Sitzdichtung<br>Seat seal | EPDM<br>FDA-konform | 58-33-044/93<br>H149618 | | | | | |
| | 2 | Sitzdichtung<br>Seat seal | FPM<br>FDA-konform | 58-33-044/73<br>H153316 | | | | | |
| | 2 | Sitzdichtung<br>Seat seal | HNBR<br>FDA-konform | 58-33-044/33<br>H168900 | | | | | |
| | 2 | Sitzdichtung<br>Seat seal | VMQ<br>FDA-konform | 58-33-044/13<br>H153317 | | | | | |
| 37 | 1 | Sitzring<br>Seat ring | 1.4404 | 16-00-190/42<br>H149397 | | | | | |

Weitergabe sowie Vervielfältigung dieser Unterlage, Verwertung und Mitteilung ihres Inhalts nicht gestattet, soweit nicht schriftlich zugestanden. Verstoß verpflichtet zum Schadensersatz und kann strafrechtliche Folgen haben (Paragraph 18 UWG, Paragraph 106 UrhG). Eigentum und alle Rechte, auch für Patenterteilung und Gebrauchsmustereintragung, vorbehalten. SPX Flow Technology Rosista GmbH.

Ersatzteilliste: spare parts list

# Doppelsitzventil DA3 DN40 - 150 ; 1.5 "- 4"
# Double seat valve DA3 DN40 - 150 ; 1.5" - 4"

| | | | | |
|---|---|---|---|---|
| Datum: | 17.01.13 | 08.05.13 | 04.03.14 | 18.09.14 |
| Name: | Trytko | Trytko | Trytko | Trytko |
| Geprüft: | | | | |
| Datum: | | | | |
| Name: | | | | |
| Geprüft: | | | | |

APV
SPX Flow Technology Rosista GmbH
D-59425 Unna Germany

Blatt 5 von 11

**RN 01.053.73**

| pos. item | Menge quantity | Beschreibung description | Material material | DN40 WS-Nr. ref.-no. | 1,5" WS-Nr. ref.-no. | DN50 WS-Nr. ref.-no. | 2" WS-Nr. ref.-no. | DN65 WS-Nr. ref.-no. | 2,5" WS-Nr. ref.-no. |
|---|---|---|---|---|---|---|---|---|---|
| 38 | 1 | Mitteldichtung<br>Seal | EPDM<br>FDA-konform | 58-33-047/93<br>H149617 | | | | | |
| | 1 | Mitteldichtung<br>Seal | FPM<br>FDA-konform | 58-33-047/73<br>H153324 | | | | | |
| | 1 | Mitteldichtung<br>Seal | HNBR<br>FDA-konform | 58-33-047/33<br>H168903 | | | | | |
| | 1 | Mitteldichtung<br>Seal | VMQ<br>FDA-konform | 58-33-047/13<br>H153325 | | | | | |
| 39 | 1 | O-Ring<br>O-ring OR 12x1 | EPDM | 58-06-040/63<br>H169477 | | | | | |
| 40 | 1 | O-Ring<br>O-ring | EPDM<br>FDA-konform | 58-06-295/63<br>69 x3 H77039 | | | | | |
| 41 | 1 | Verschluß-Stopfen<br>Locking plug G 1/8" | Kunst. schwarz | 08-74-014/93<br>H16507 | | | | | |
| 42 | 1 | Sechskant Mutter m. Klemmteil<br>Hexagon nut with clamp part M10x1 | 1.4301 | 65-50-087/15<br>H118903 | | | | | |
| 43 | 1 | G-Verschraubung<br>Straight union | PVDF-schwarz | 08-63-003/13<br>H16388 | | | | | |
| 44 | 1 | Anschlagring nur bei DN125+150<br>Stop ring only for DN125+150 | POM | | | | | | |
| 45 | 1 | CU43-M-DC<br>CU43-M-DC | PA 6.6 GF30<br>schwarz | 08-45-105/93<br>H320465 | | | | | |
| | 1 | CU43-M-AS-I-extended<br>CU43-M-AS-I-extended | PA 6.6 GF30<br>schwarz | 08-45-115/93<br>H320472 | | | | | |
| | 1 | CU43-M-AS-I-standard<br>CU43-M-AS-I-standard | PA 6.6 GF30<br>schwarz | 08-45-255/93<br>H324678 | | | | | |
| 46 | 1 | CU4-M-Adapter komplett<br>CU4-M-adapter complete | PA 6.6 GF30<br>schwarz | 08-48-602/93<br>H320476 | | | | | |
| 47 | 1 | Luftschlauch 6 x 1<br>Air Hose (øAxI 6x4) | PA 12 "W | 08-75-020/53<br>H16516 | | | | | |
| | | | | | | | | | |

Weitergabe sowie Vervielfältigung dieser Unterlage, Verwertung und Mitteilung ihres Inhalts nicht gestattet, soweit nicht schriftlich zugestanden. Verstoß verpflichtet zum Schadensersatz und kann strafrechtliche Folgen haben (Paragraph 18 UWG, Paragraph 106 UrhG). Eigentum und alle Rechte, auch für Patenterteilung und Gebrauchsmustereintragung, vorbehalten. SPX Flow Technology Rosista GmbH.

Ersatzteilliste: spare parts list

# Doppelsitzventil DA3 DN40 - 150 ; 1.5 "- 4"
# Double seat valve DA3 DN40 - 150 ; 1.5" - 4"

| | | | | |
|---|---|---|---|---|
| Datum: | 17.01.13 | 08.05.13 | 04.03.14 | 18.09.14 |
| Name: | Trytko | Trytko | Trytko | Trytko |
| Geprüft: | | | | |
| Datum: | 21.09.16 | | | |
| Name: | C.Keil | | | |
| Geprüft: | | | | |

APV
SPX Flow Technology Rosista GmbH
D-59425 Unna Germany

Blatt 6 von 11

**RN 01.053.73**

| pos. item | Menge quantity | Beschreibung description | Material material | DN40 WS-Nr. ref.-no. | 1,5" WS-Nr. ref.-no. | DN50 WS-Nr. ref.-no. | 2" WS-Nr. ref.-no. | DN65 WS-Nr. ref.-no. | 2,5" WS-Nr. ref.-no. |
|---|---|---|---|---|---|---|---|---|---|
| | 1 | Ventileinsatz<br>Valve insert | EPDM | 16-36-394/59<br>H176402 | | 16-36-444/59<br>H176403 | | 16-36-494/59<br>H176405 | 16-36-519/59<br>H176404 |
| | 1 | Ventileinsatz<br>Valve insert | FPM | 16-36-394/69<br>H201818 | | 16-36-444/69<br>H200979 | | 16-36-494/69<br>H207260 | 16-36-519/69<br>H200978 |
| | 1 | Ventileinsatz<br>Valve insert | HNBR | 16-36-394/29<br>H201779 | | 16-36-444/29<br>H202157 | | 16-36-494/29<br>H204846 | 16-36-519/29<br>H200295 |
| | 1 | Ventileinsatz<br>Valve insert | VMQ | 16-36-394/61<br>H207519 | | 16-36-444/61<br>H179716 | | 16-36-494/61<br>H321273 | 16-36-519/61<br>H179603 |
| | | | | | | | | | |
| | | | | | | | | | |
| | | **Pos. 29, 30, 31, 32, 33, 34, 36, 38, 39 nur im kompletten Dichtungssatz erhältlich**<br>**Item 29, 30, 31, 32, 33, 34, 36, 38, 39 available as complete seal kits only** | | | | | | | |
| | 1 | Dichtungssatz<br>Seal kit | FPM | 58-34-686/00<br>H202536 | | | | | |
| | 1 | Dichtungssatz<br>Seal kit | EPDM | 58-34-686/01<br>H179206 | | | | | |
| | 1 | Dichtungssatz<br>Seal kit | VMQ | 58-34-686/02<br>H201989 | | | | | |
| | 1 | Dichtungssatz<br>Seal kit | HNBR | 58-34-686/06<br>H179208 | | | | | |
| | | | | | | | | | |
| | | | | | | | | | |
| | | | | | | | | | |
| | | | | | | | | | |
| | | | | | | | | | |

Weitergabe sowie Vervielfältigung dieser Unterlage, Verwertung und Mitteilung ihres Inhalts nicht gestattet, soweit nicht schriftlich zugestanden. Verstoß verpflichtet zum Schadensersatz und kann strafrechtliche Folgen haben (Paragraph 18 UWG, Paragraph 106 UrhG). Eigentum und alle Rechte, auch für Patenterteilung und Gebrauchsmustereintragung, vorbehalten. SPX Flow Technology Rosista GmbH.

Ersatzteilliste: spare parts list

# Doppelsitzventil DA3 DN40 - 150 ; 1.5 "- 4"
# Double seat valve DA3 DN40 - 150 ; 1.5" - 4"

| | | | | |
|---|---|---|---|---|
| Datum: | 17.01.13 | 08.05.13 | 04.03.14 | 18.09.14 |
| Name: | Trytko | Trytko | Trytko | Trytko |
| Geprüft: | | | | |
| Datum: | 21.09.16 | | | |
| Name: | C.Keil | | | |
| Geprüft: | | | | |

APV
SPX Flow Technology Rosista GmbH
D-59425 Unna Germany

Blatt 7 von 11

**RN 01.053.73**

| pos. item | Menge quantity | Beschreibung description | Material material | 3" WS-Nr. ref.-no. | DN80 WS-Nr. ref.-no. | DN100 WS-Nr. ref.-no. | 4" WS-Nr. ref.-no. | DN125 WS-Nr. ref.-no. | DN150 WS-Nr. ref.-no. |
|---|---|---|---|---|---|---|---|---|---|
| 1 | 1 | Spritz Anschluss<br>CIP connection | PP GF30<br>HOSTAC | 09-40-114/93<br>H168321 | 09-40-115/93<br>H168322 | | | 09-40-118/93<br>H200320 | |
| 2 | 1 | Gehäuse<br>Housing DA31 1+2S | 1.4404 | 16-61-557/47<br>H176632 | 16-61-532/47<br>H176637 | 16-61-632/47<br>H176638 | 16-61-657/47<br>H176633 | 16-61-682/47<br>H200718 | 16-61-732/47<br>H200719 |
| | 1 | Gehäuse<br>Housing DA32 1+2+3S | 1.4404 | 16-62-557/47<br>H176643 | 16-62-532/47<br>H176648 | 16-62-632/47<br>H176649 | 16-62-657/47<br>H176644 | 16-62-682/47<br>H200785 | 16-62-732/47<br>H200780 |
| | 1 | Gehäuse<br>Housing DA33 1+2+3S | 1.4404 | 16-63-557/47<br>H176653 | 16-63-532/47<br>H176658 | 16-63-632/47<br>H176659 | 16-63-657/47<br>H176654 | 16-63-682/47<br>H200778 | 16-63-732/47<br>H200781 |
| | 1 | Gehäuse<br>Housing DA34 1+2+3+4S | 1.4404 | 16-64-557/47<br>H176328 | 16-64-532/47<br>H176323 | 16-64-632/47<br>H176324 | 16-64-657/47<br>H176329 | 16-64-682/47<br>H200779 | 16-64-732/47<br>H200782 |
| 3 | 1 | Schaft unten<br>Lower valve shaft | 1.4404 | 16-22-568/42<br>H176374 | 16-22-543/42<br>H176379 | 16-22-668/42<br>H176381 | | 16-22-965/42<br>H200422 | 16-22-966/42<br>H200423 |
| 4 | 1 | Zugstange<br>Guide rod | 1.4404 | 16-24-567/42<br>H176397 | 16-24-542/42<br>H176398 | 16-24-642/42<br>H176399 | | 16-24-692/42<br>H200438 | 16-24-742/42<br>H200437 |
| 5 | 1 | Schaft oben<br>Upper valve shaft | 1.4404 | 16-22-214/42<br>H149303 | 16-22-215/42<br>H149304 | 16-22-216/42<br>H147572 | | 16-22-217/42<br>H150161 | 16-22-218/42<br>H150162 |
| 6 | 1 | Ventilsitz mit Spülkammer<br>Valve seat with flushing chamber | 1.4404 | 16-37-569/43<br>H176348 | 16-37-544/43<br>H176349 | 16-37-644/43<br>H176350 | | 16-37-080/43<br>H200441 | 16-37-081/43<br>H200439 |
| 7 | 4 | Skt. Schraube<br>Hex. Screw DIN EN24017-A2-70 | 1.4301 | 65-01-079/15<br>M8x14 H78768 | | | | 65-01-130/15<br>M10x16 H78806 | |
| 8 | 1 | Federzylinder<br>Spring actuator | 1.4301 | 16-30-500/17<br>H323172 | 16-30-501/17<br>H323201 | | | 16-30-108/17<br>H150229 | |
| 9 | 1 | Hauptzylinder<br>Main actuator | Vestamid | 15-31-239/93<br>H151072 | 15-31-240/93<br>H147795 | | | 15-31-241/93<br>H150526 | |
| 10 | 1 | Anlüftzylinder<br>Seat lifting device | Vestamid | 16-30-225/93<br>H151130 | 16-30-226/93<br>H147794 | | | 16-30-227/93<br>H150525 | |
| 11 | 1 | Anschlagschraube<br>Stop sleeve | Vestamid<br>1.4057 | 16-28-260/93<br>H176400 | | | | 16-28-262/32<br>H200728 | |
| 12 | 3 | W-Verschraubung<br>Angular union G1/8" 6x1 | 1.4301 | 08-60-750/93<br>H208825 | | | | | |
| 13 | 2 | Initiatorhalterung<br>Mounting block | PA6.6 schwarz | 15-33-918/93<br>H154913 | | | | | |

Weitergabe sowie Vervielfältigung dieser Unterlage, Verwertung und Mitteilung ihres Inhalts nicht gestattet, soweit nicht schriftlich zugestanden. Verstoß verpflichtet zum Schadensersatz und kann strafrechtliche Folgen haben (Paragraph 18 UWG, Paragraph 106 UrhG). Eigentum und alle Rechte, auch für Patenterteilung und Gebrauchsmustereintragung, vorbehalten. SPX Flow Technology Rosista GmbH.

Ersatzteilliste: spare parts list

# Doppelsitzventil DA3 DN40 - 150 ; 1.5 "- 4"
# Double seat valve DA3 DN40 - 150 ; 1.5" - 4"

| | | | | |
|---|---|---|---|---|
| Datum: | 17.01.13 | 08.05.13 | 04.03.14 | 18.09.14 |
| Name: | Trytko | Trytko | Trytko | Trytko |
| Geprüft: | | | | |

| | | | | |
|---|---|---|---|---|
| Datum: | 21.09.16 | | | |
| Name: | C.Keil | | | |
| Geprüft: | | | | |

APV
SPX Flow Technology Rosista GmbH
D-59425 Unna Germany



**RN 01.053.73**

| pos. item | Menge quantity | Beschreibung description | Material material | 3" WS-Nr. ref.-no. | DN80 WS-Nr. ref.-no. | DN100 WS-Nr. ref.-no. | 4" WS-Nr. ref.-no. | DN125 WS-Nr. ref.-no. | DN150 WS-Nr. ref.-no. |
|---|---|---|---|---|---|---|---|---|---|
| 14 | 1 | Entlüftungsstopfen G1/8"<br>Venting plug | PE-Hard/Yellow | 08-60-005/93<br>H16218 | | | | | |
| 15 | 1 | Verschlußkappe ø11,1x5<br>Cap | PVC | 08-05-066/93<br>H154816 | | | | | |
| 16 | 1 | Sicherungsmutter<br>Stop nut | 1.4301 | 65-50-137/15<br>H147640 | | | | | |
| 17 | 1 | Sicherungsscheibe<br>Lock washer | 1.4301 | 67-03-001/15<br>H147639 | | | | | |
| 18 | 1 | Quadring Q4221-N7004<br>Quadring 36x3,53 | NBR | 58-01-237/83<br>H148386 | | | | | |
| 19 | 4 | Skt. Schraube DIN EN 24017-A2-70<br>Hex. Screw | 1.4301 | 65-01-114/15<br>M8x156 H152060 | 65-01-115/15<br>M8x168 H313215 | | | 65-01-157/15<br>M10x204 H152018 | |
| 20 | 1 | Kolbenstange Anlüftzylinder kpl.<br>Piston shaft for seat lifting device cpl. | 1.4301 | 16-29-065/17<br>H149396 | 16-29-066/17<br>H149654 | | | 16-29-067/17<br>H150503 | |
| 21 | 1 | Führungsband<br>PTFE driving band | Turcite 51 | 08-39-187/93<br>H147972 | | | | | |
| 22 | 3 | Quadring Q4216-N7004<br>Quadring 28,1x3,53 | NBR | 58-01-236/83<br>H148385 | | | | | |
| 23 | 2 | Kolbendichtung<br>Piston seal | NBR | 58-01-760/83<br>H76868 | 58-01-761/83<br>H76869 | | | 58-01-763/83<br>H76871 | |
| 24 | 1 | Zylinderkerbstift 6x 14,8<br>Cyl. Pin | 1.4305 | 67-15-055/12<br>H147811 | | | | | |
| 25 | 2 | O-Ring<br>O-ring | NBR | 58-06-372/83<br>82,22x2,62 H150893 | 58-06-493/83<br>101,27x2,62 H148389 | | | 58-06-696/83<br>154x3 H174262 | |
| 26 | 1 | Kolben Hauptzylinder<br>Piston for main actuator | 1.4301 | 16-29-070/12<br>H149389 | 16-29-071/12<br>H147594 | | | 16-29-072/12<br>H150291 | |
| 27 | 1 | Deckel Hauptzylinder<br>Cover for main actuator | PA12 | 16-00-207/93<br>H149350 | 16-00-210/93<br>H147750 | | | 16-00-211/93<br>H150918 | |
| 28 | 1 | Sprengring<br>Retainer ring | 1.4310 | 08-39-083/13<br>H14883 | | | | | |
| 29 | 1 | Führungsband<br>PTFE driving band | Turcite | 08-39-198/93<br>H150892 | 08-39-188/93<br>H147973 | | | 08-39-185/93<br>H152006 | |

Weitergabe sowie Vervielfältigung dieser Unterlage, Verwertung und Mitteilung ihres Inhalts nicht gestattet, soweit nicht schriftlich zugestanden. Verstoß verpflichtet zum Schadensersatz und kann strafrechtliche Folgen haben (Paragraph 18 UWG, Paragraph 106 UrhG). Eigentum und alle Rechte, auch für Patenterteilung und Gebrauchsmustereintragung, vorbehalten. SPX Flow Technology Rosista GmbH.

Ersatzteilliste: spare parts list

# Doppelsitzventil DA3 DN40 - 150 ; 1.5 "- 4"
# Double seat valve DA3 DN40 - 150 ; 1.5" - 4"

| | | | | |
|---|---|---|---|---|
| Datum: | 17.01.13 | 08.05.13 | 04.03.14 | 18.09.14 |
| Name: | Trytko | Trytko | Trytko | Trytko |
| Geprüft: | | | | |
| Datum: | 21.09.16 | | | |
| Name: | C.Keil | | | |
| Geprüft: | | | | |

APV
SPX Flow Technology Rosista GmbH
D-59425 Unna Germany

Blatt 9 von 11

**RN 01.053.73**

| pos. item | Menge quantity | Beschreibung description | Material material | 3" WS-Nr. ref.-no. | DN80 WS-Nr. ref.-no. | DN100 WS-Nr. ref.-no. | 4" WS-Nr. ref.-no. | DN125 WS-Nr. ref.-no. | DN150 WS-Nr. ref.-no. |
|---|---|---|---|---|---|---|---|---|---|
| 30 | 1 | Quadring<br>Quadring Q4230-N7502 | EPDM | 58-01-329/63<br>H150898 | 58-01-238/63<br>H148387 | | | 58-01-791/63<br>H152005 | |
| 31 | 1 | O-Ring<br>O-ring OR 9,25x1,78 | EPDM<br>FDA-konform | 58-06-029/64<br>H148388 | | | | | |
| 32 | 2 | Gehäusedichtung<br>Housing seal | EPDM<br>FDA-konform | 58-33-542/93<br>H77543 | 58-33-642/93<br>H77583 | | | 58-33-742/93<br>H77625 | |
| | 2 | Gehäusedichtung<br>Housing seal | FPM<br>FDA-konform | 58-33-542/73<br>H77542 | 58-33-642/73<br>H77582 | | | 58-33-742/73<br>H77624 | |
| | 2 | Gehäusedichtung<br>Housing seal | HNBR<br>FDA-konform | 58-33-542/33<br>H170075 | 58-33-642/33<br>H170074 | | | 58-33-742/33<br>H172126 | |
| 33 | 2 | Tellerdichtung<br>Seat seal | EPDM<br>FDA-konform | 58-33-493/93<br>H77515 | 58-33-643/93<br>H77586 | | | 58-33-743/93<br>H77628 | |
| | 2 | Tellerdichtung<br>Seat seal | FPM<br>FDA-konform | 58-33-493/73<br>H77514 | 58-33-643/73<br>H77585 | | | 58-33-743/73<br>H77627 | |
| | 2 | Tellerdichtung<br>Seat seal | HNBR<br>FDA-konform | 58-33-493/33<br>H166678 | 58-33-643/33<br>H166682 | | | 58-33-743/33<br>H170177 | |
| | 2 | Tellerdichtung<br>Seat seal | VMQ<br>FDA-konform | 58-33-493/13<br>H77513 | 58-33-643/13<br>H77584 | | | 58-33-743/13<br>H77626 | |
| 34 | 2 | Schaftdichtung<br>Shaft seal | PTFE | 58-33-016/23<br>H149620 | 58-33-017/23<br>H150708 | | | 58-33-018/23<br>H150531 | |
| 35 | 1 | Führungsring<br>Quide ring | PTFE<br>25%Kohle | 08-39-080/93<br>H14880 | | | | | |
| 36 | 2 | Sitzdichtung<br>Seat seal | EPDM<br>FDA-konform | 58-33-044/93<br>H149618 | 58-33-045/93<br>H149619 | | | 58-33-046/93<br>H150529 | |
| | 2 | Sitzdichtung<br>Seat seal | FPM<br>FDA-konform | 58-33-044/73<br>H153316 | 58-33-045/73<br>H153318 | | | 58-33-046/73<br>H153937 | |
| | 2 | Sitzdichtung<br>Seat seal | HNBR<br>FDA-konform | 58-33-044/33<br>H168900 | 58-33-045/33<br>H168901 | | | 58-33-046/33<br>H168902 | |
| | 2 | Sitzdichtung<br>Seat seal | VMQ<br>FDA-konform | 58-33-044/13<br>H153317 | 58-33-045/13<br>H153319 | | | 58-33-046/13<br>H153938 | |
| 37 | 1 | Sitzring<br>Seat ring | 1.4404 | 16-00-190/42<br>H149397 | 16-00-191/42<br>H148255 | | | 16-00-193/42<br>H150409 | |

Weitergabe sowie Vervielfältigung dieser Unterlage, Verwertung und Mitteilung ihres Inhalts nicht gestattet, soweit nicht schriftlich zugestanden. Verstoß verpflichtet zum Schadensersatz und kann strafrechtliche Folgen haben (Paragraph 18 UWG, Paragraph 106 UrhG). Eigentum und alle Rechte, auch für Patenterteilung und Gebrauchsmustereintragung, vorbehalten. SPX Flow Technology Rosista GmbH.

Ersatzteilliste: spare parts list

# Doppelsitzventil DA3 DN40 - 150 ; 1.5 "- 4"
# Double seat valve DA3 DN40 - 150 ; 1.5" - 4"

| | | | | |
|---|---|---|---|---|
| Datum: | 17.01.13 | 08.05.13 | 04.03.14 | 18.09.14 |
| Name: | Trytko | Trytko | Trytko | Trytko |
| Geprüft: | | | | |
| Datum: | 21.09.16 | | | |
| Name: | C.Keil | | | |
| Geprüft: | | | | |

APV
SPX Flow Technology Rosista GmbH
D-59425 Unna Germany

Blatt 10 von 11

**RN 01.053.73**

| pos. item | Menge quantity | Beschreibung description | Material material | 3" WS-Nr. ref.-no. | DN80 WS-Nr. ref.-no. | DN100 WS-Nr. ref.-no. | 4" WS-Nr. ref.-no. | DN125 WS-Nr. ref.-no. | DN150 WS-Nr. ref.-no. |
|---|---|---|---|---|---|---|---|---|---|
| 38 | 1 | Mitteldichtung<br>Seal | EPDM<br>FDA-konform | 58-33-047/93<br>H149617 | 58-33-048/93<br>H149621 | | | 58-33-049/93<br>H150530 | |
| | 1 | Mitteldichtung<br>Seal | FPM<br>FDA-konform | 58-33-047/73<br>H153324 | 58-33-048/73<br>H153322 | | | 58-33-049/73<br>H153939 | |
| | 1 | Mitteldichtung<br>Seal | HNBR<br>FDA-konform | 58-33-047/33<br>H168903 | 58-33-048/33<br>H168904 | | | 58-33-049/33<br>H168905 | |
| | 1 | Mitteldichtung<br>Seal | VMQ<br>FDA-konform | 58-33-047/13<br>H153325 | 58-33-048/13<br>H153323 | | | 58-33-049/13<br>H153940 | |
| 39 | 1 | O-Ring<br>O-ring OR 12x1 | EPDM | 58-06-040/63<br>H169477 | | | | | |
| 40 | 1 | O-Ring<br>O-ring | EPDM<br>FDA-konform | 58-06-295/63<br>69 x3 H77039 | 58-06-490/63<br>100x3 H77061 | | | 58-06-655/63<br>135x3 H77081 | |
| 41 | 1 | Verschluß-Stopfen<br>Locking plug | Kunst. schwarz | 08-74-014/93<br>G 1/8" H16507 | | | | 08-60-007/93<br>G 1/4" H176010 | |
| 42 | 1 | Sechskant Mutter mit Klemmteil<br>Hexagon nut with clamp part M10x1 | 1.4301 | 65-50-087/15<br>H118903 | | | | | |
| 43 | 1 | G-Verschraubung<br>Straight union | PVDF-schwarz<br>/ PA6.6 | 08-63-003/13<br>G1/8" H16388 | | | | 16-38-200/42<br>10/8-G1/4" H329696 | |
| 44 | 1 | Anschlagring nur bei DN125+150<br>Stop ring only for DN125+150 | POM | | | | | 08-39-001/93<br>H314101 | |
| 45 | 1 | CU43-M-DC<br>CU43-M-DC | PA 6.6 GF30<br>schwarz | 08-45-105/93<br>H320465 | | | | | |
| | 1 | CU43-M-AS-I-extended<br>CU43-M-AS-I-extended | PA 6.6 GF30<br>schwarz | 08-45-115/93<br>H320472 | | | | | |
| | 1 | CU43-M-AS-I-standard<br>CU43-M-AS-I-standard | PA 6.6 GF30<br>schwarz | 08-45-255/93<br>H324678 | | | | | |
| 46 | 1 | CU4-M-Adapter komplett<br>CU4-M-adapter complete | PA 6.6 GF30<br>schwarz | 08-48-602/93<br>H320476 | | | | | |
| 47 | 1 | Luftschlauch 6 x 1<br>Air Hose (øAxI 6x4) | PA 12 W | 08-75-020/53<br>H16516 | | | | | |
| | | | | | | | | | |

Weitergabe sowie Vervielfältigung dieser Unterlage, Verwertung und Mitteilung ihres Inhalts nicht gestattet, soweit nicht schriftlich zugestanden. Verstoß verpflichtet zum Schadensersatz und kann strafrechtliche Folgen haben (Paragraph 18 UWG, Paragraph 106 UrhG). Eigentum und alle Rechte, auch für Patenterteilung und Gebrauchsmustereintragung, vorbehalten. SPX Flow Technology Rosista GmbH.

Ersatzteilliste: spare parts list

# Doppelsitzventil DA3 DN40 - 150 ; 1.5 "- 4"
# Double seat valve DA3 DN40 - 150 ; 1.5" - 4"

| | | | | |
|---|---|---|---|---|
| Datum: | 17.01.13 | 08.05.13 | 04.03.14 | 18.09.14 |
| Name: | Trytko | Trytko | Trytko | Trytko |
| Geprüft: | | | | |
| Datum: | 21.09.16 | | | |
| Name: | C.Keil | | | |
| Geprüft: | | | | |

APV
SPX Flow Technology Rosista GmbH
D-59425 Unna Germany

Blatt 11 von 11

**RN 01.053.73**

| pos. item | Menge quantity | Beschreibung description | Material material | 3" WS-Nr. ref.-no. | DN80 WS-Nr. ref.-no. | DN100 WS-Nr. ref.-no. | 4" WS-Nr. ref.-no. | DN125 WS-Nr. ref.-no. | DN150 WS-Nr. ref.-no. |
|---|---|---|---|---|---|---|---|---|---|
| | 1 | Ventileinsatz<br>Valve insert | EPDM | 16-36-569/59<br>H176406 | 16-36-544/59<br>H176407 | 16-36-644/59<br>H176408 | | 16-36-694/59<br>H200959 | 16-36-744/59<br>H200961 |
| | 1 | Ventileinsatz<br>Valve insert | FPM | 16-36-569/69<br>H205659 | 16-36-544/69<br>H180818 | 16-36-644/69<br>H206984 | | 16-36-694/69 | 16-36-744/69 |
| | 1 | Ventileinsatz<br>Valve insert | HNBR | 16-36-569/29<br>H201115 | 16-36-544/29<br>H204847 | 16-36-644/29<br>H202592 | | 16-36-694/29 | 16-36-744/29<br>H331178 |
| | 1 | Ventileinsatz<br>Valve insert | VMQ | 16-36-569/61<br>H179715 | 16-36-544/61<br>H207015 | 16-36-644/61 | | 16-36-694/61 | 16-36-744/61 |
| | | | | | | | | | |
| | | | | | | | | | |
| | | **Pos. 29, 30, 31, 32, 33, 34, 36, 38, 39 nur im kompletten Dichtungssatz erhältlich**<br>**Item 29, 30, 31, 32, 33, 34, 36, 38, 39 available as complete seal kits only** | | | | | | | |
| | 1 | Dichtungssatz<br>Seal kit | FPM | 58-34-686/00<br>H202536 | 58-34-689/00<br>H202535 | | | 58-34-692/00 | |
| | 1 | Dichtungssatz<br>Seal kit | EPDM | 58-34-686/01<br>H179206 | 58-34-689/01<br>H179207 | | | 58-34-692/01<br>H201787 | |
| | 1 | Dichtungssatz<br>Seal kit | VMQ | 58-34-686/02<br>H201989 | 58-34-689/02<br>H201990 | | | 58-34-692/02<br>H331164 | |
| | 1 | Dichtungssatz<br>Seal kit | HNBR | 58-34-686/06<br>H179208 | 58-34-689/06<br>H179209 | | | 58-34-692/06<br>H201786 | |
| | | | | | | | | | |
| | | | | | | | | | |
| | | | | | | | | | |
| | | | | | | | | | |
| | | | | | | | | | |

Weitergabe sowie Vervielfältigung dieser Unterlage, Verwertung und Mitteilung ihres Inhalts nicht gestattet, soweit nicht schriftlich zugestanden.
Verstoß verpflichtet zum Schadensersatz und kann strafrechtliche Folgen haben (Paragraph 18 UWG, Paragraph 106 UrhG). Eigentum und alle Rechte,
auch für Patenterteilung und Gebrauchsmustereintragung, vorbehalten. SPX Flow Technology Rosista GmbH.

Ersatzteilliste: spare parts list

# Doppelsitzventil DA3 Mitteldichtung Version 2 DN40 - 150, 1,5"-4"
# Double seat valve middle seal version 2 DA3 DN40 - 150, 1,5"-4"

| | | | | |
|---|---|---|---|---|
| Datum: | 10.10.16 | | | |
| Name: | C.Keil | | | |
| Geprüft: | | | | |

| | | | | |
|---|---|---|---|---|
| Datum: | | | | |
| Name: | | | | |
| Geprüft: | | | | |

SPX Flow Technology Rosista GmbH
D-59425 Unna Germany

Blatt 1 von 1

**RN 01.053.73**

| pos. item | Menge quantity | Beschreibung description | Material material | 40 WS-Nr. ref.-no. | 50 WS-Nr. ref.-no. | 65 WS-Nr. ref.-no. | 80 WS-Nr. ref.-no. | 100 WS-Nr. ref.-no. |
|---|---|---|---|---|---|---|---|---|
| 3 | 1 | DA3 Schaft Unten Version 2<br>DA3 lower shaft version 2 | 1.4404 | 000 16-24-400/42<br>H328270 | 000 16-24-450/42<br>H328271 | 000 16-24-500/42<br>H328272 | 000 16-24-550/42<br>H328274 | 000 16-24-675/42<br>H328276 |
| 5 | 1 | DA3 Schaft oben Version 2<br>DA3 upper shaft version 2 | 1.4404 | - | - | - | 000 16-22-546/42<br>H333592 | 000 16-22-646/42<br>H333619 |
| 35 | 1 | Führungsbuchse<br>guide ring | PTFE | - | - | - | 000 08-39-080/93<br>H14880 | |
| 38 | 1 | Mitteldichtung Version 2<br>middle seal version 2 | EPDM | 000 58-33-998/93<br>H327602 | | | 000 58-33-997/93<br>H327985 | |
| 38 | 1 | Mitteldichtung Version 2<br>middle seal version 2 | HNBR | 000 58-33-998/33<br>H332652 | | | 000 58-33-997/33<br>H332649 | |
| 38 | 1 | Mitteldichtung Version 2<br>middle seal version 2 | FPM | 000 58-33-998/71<br>H332653 | | | 000 58-33-997/71<br>H332648 | |
| 39 | 1 | O-Ring 12x1<br>O-ring 12x1 | EPDM | 000 58-06-040/63<br>H169477 | | | | |

| pos. item | Menge quantity | Beschreibung description | Material material | 1.5" WS-Nr. ref.-no. | 2" WS-Nr. ref.-no. | 2.5" WS-Nr. ref.-no. | 3" WS-Nr. ref.-no. | 4" WS-Nr. ref.-no. |
|---|---|---|---|---|---|---|---|---|
| 3 | 1 | DA3 Schaft Unten Version 2<br>DA3 lower shaft version 2 | 1.4404 | 000 16-24-400/42<br>H328270 | 000 16-24-450/42<br>H328271 | 000 16-24-525/42<br>H328273 | 000 16-24-575/42<br>H328275 | 000 16-24-675/42<br>H328276 |
| 5 | 1 | DA3 Schaft oben Version 2<br>DA3 upper shaft version 2 | 1.4404 | - | - | - | - | 000 16-22-646/42<br>H333619 |
| 35 | 1 | Führungsbuchse<br>guide ring | PTFE | - | - | - | - | 000 08-39-080/93<br>H14880 |
| 38 | 1 | Mitteldichtung Version 2<br>middle seal version 2 | EPDM | 000 58-33-998/93<br>H327602 | | | | 000 58-33-997/93<br>H327985 |
| 38 | 1 | Mitteldichtung Version 2<br>middle seal version 2 | HNBR | 000 58-33-998/33<br>H332652 | | | | 000 58-33-997/93<br>H327985 |
| 38 | 1 | Mitteldichtung Version 2<br>middle seal version 2 | FPM | 000 58-33-998/71<br>H332653 | | | | 000 58-33-997/71<br>H332648 |
| 39 | 1 | O-Ring 12x1<br>O-ring 12x1 | EPDM | 000 58-06-040/63<br>H169477 | | | | |

Weitergabe sowie Vervielfältigung dieser Unterlage, Verwertung und Mitteilung ihres Inhalts nicht gestattet, soweit nicht schriftlich zugestanden. Verstoß verpflichtet zum Schadensersatz und kann strafrechtliche Folgen haben (Paragraph 18 UWG, Paragraph 106 UrhG). Eigentum und alle Rechte, auch für Patenterteilung und Gebrauchsmustereintragung, vorbehalten. APV Rosista GmbH.

Ersatzteilliste: spare parts list

# Doppelsitzventil DA3 1.5 - 6 Sh5
# Double seat valve DA3 1,5 - 6 Sh5

| | | | | |
|---|---|---|---|---|
| Datum: | 23.01.13 | 12.03.15 | | |
| Name: | Trytko | Trytko | | |
| Geprüft: | | | | |

| | | | | |
|---|---|---|---|---|
| Datum: | | | | |
| Name: | | | | |
| Geprüft: | | | | |

APV
SPX Flow Technology Rosista GmbH
D-59425 Unna Germany

Blatt 1 von 6

**RN 01.053.73-2**

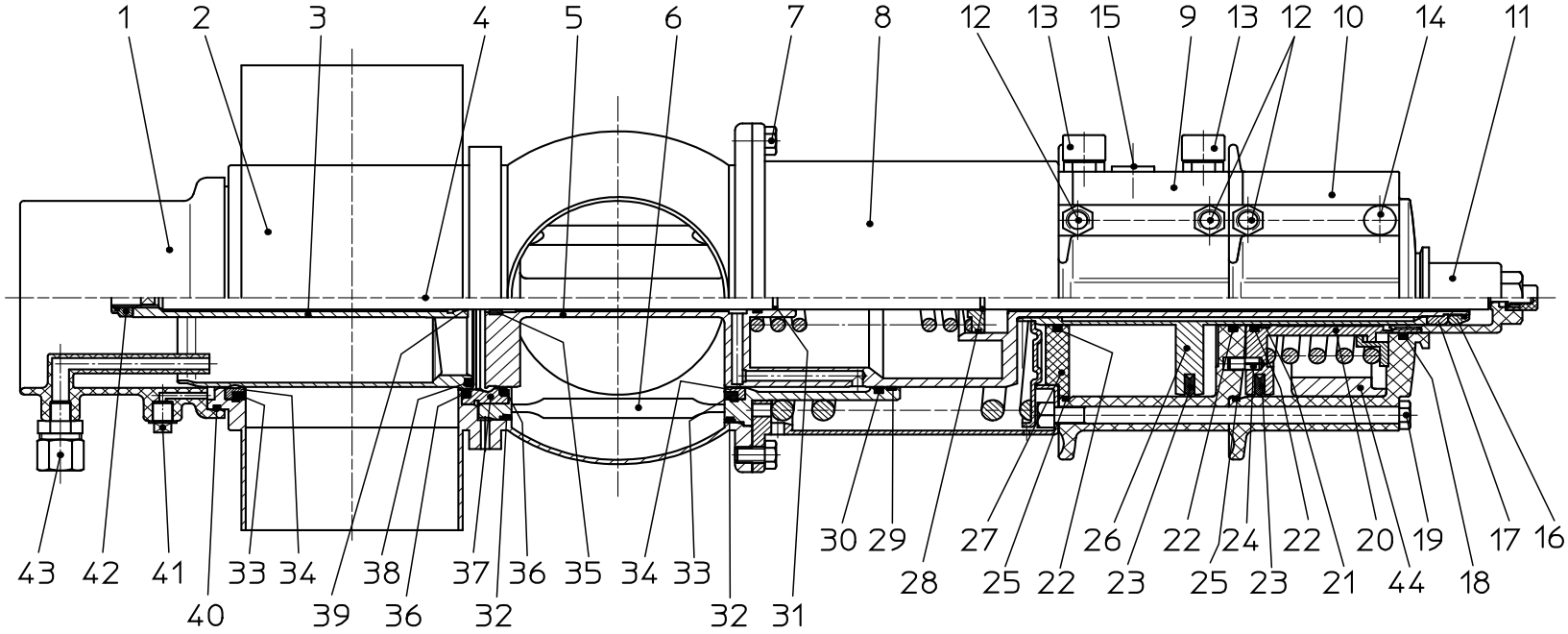


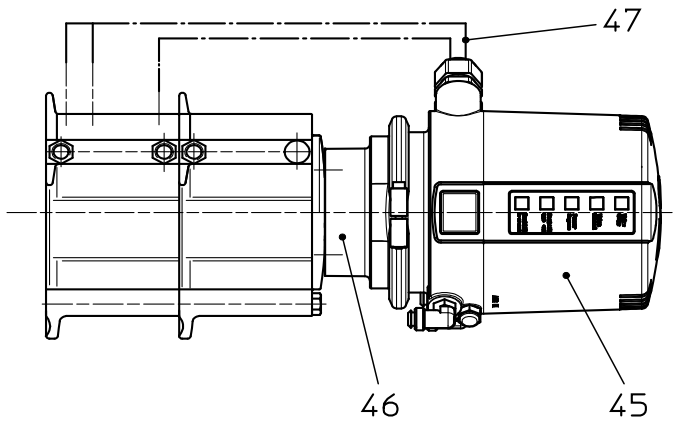

Weitergabe sowie Vervielfältigung dieser Unterlage, Verwertung und Mitteilung ihres Inhalts nicht gestattet, soweit nicht schriftlich zugestanden. Verstoß verpflichtet zum Schadensersatz und kann strafrechtliche Folgen haben (Paragraph 18 UWG, Paragraph 106 UrhG). Eigentum und alle Rechte, auch für Patenterteilung und Gebrauchsmustereintragung, vorbehalten. APV Rosista GmbH.

Ersatzteilliste: spare parts list

# Doppelsitzventil DA3 1.5 - 6 Sh5
# Double seat valve DA3 1,5 - 6 Sh5

| | | | | |
|---|---|---|---|---|
| Datum: | 23.01.13 | 12.03.15 | | |
| Name: | Trytko | Trytko | | |
| Geprüft: | | | | |
| Datum: | | | | |
| Name: | | | | |
| Geprüft: | | | | |

APV
SPX Flow Technology Rosista GmbH
D-59425 Unna Germany

Blatt 2 von 6

**RN 01.053.73-2**

| pos. item | Menge quantity | Beschreibung description | Material material | 1,5 Sh5 WS-Nr. ref.-no. | 2 Sh5 WS-Nr. ref.-no. | 2,5 Sh5 WS-Nr. ref.-no. | 3 Sh5 WS-Nr. ref.-no. | 4 Sh5 WS-Nr. ref.-no. | 6 Sh5 WS-Nr. ref.-no. |
|---|---|---|---|---|---|---|---|---|---|
| 1 | 1 | Spritz Anschluss<br>CIP connection | PP GF30<br>HOSTAC | 09-40-114/93<br>H168321 | | | 09-40-115/93<br>H168322 | | 09-40-118/93<br>H200320 |
| 2 | 1 | Gehäuse<br>Housing DA31 1+2S | 1.4404 | 16-61-408/47<br>H179065 | 16-61-458/47<br>H179066 | 16-61-508/47<br>H179067 | 16-61-558/47<br>H179068 | 16-61-658/47<br>H179069 | 16-61-808/47 |
| | 1 | Gehäuse<br>Housing DA32 1+2+3S | 1.4404 | 16-62-408/47 | 16-62-458/47 | 16-62-508/47 | 16-62-558/47 | 16-62-658/47 | 16-62-808/47 |
| | 1 | Gehäuse<br>Housing DA33 1+2+3S | 1.4404 | 16-63-408/47 | 16-63-458/47 | 16-63-508/47 | 16-63-558/47 | 16-63-658/47 | 16-63-658/47 |
| | 1 | Gehäuse<br>Housing DA34 1+2+3+4S | 1.4404 | 16-64-408/47<br>H179408 | 16-64-458/47<br>H179410 | 16-64-508/47<br>H179411 | 16-64-558/47<br>H179412 | 16-64-658/47<br>H179413 | 16-64-808/47<br>H328628 |
| 3 | 1 | Schaft unten<br>Lower valve shaft | 1.4404 | 16-22-193/42<br>H178877 | 16-22-194/42<br>H178878 | 16-22-195/42<br>H178879 | 16-22-196/42<br>H178880 | 16-22-197/42<br>H178881 | 16-22-039/42<br>H328631 |
| 4 | 1 | Zugstange<br>Guide rod | 1.4404 | 16-24-016/42<br>H178826 | 16-24-017/42<br>H178827 | 16-24-018/42<br>H178828 | 16-24-019/42<br>H178829 | 16-24-020/42<br>H178830 | 16-24-817/42<br>H328641 |
| 5 | 1 | Schaft oben<br>Upper valve shaft | 1.4404 | 16-22-187/42<br>H178842 | 16-22-188/42<br>H178843 | 16-22-189/42<br>H178844 | 16-22-190/42<br>H178845 | 16-22-191/42<br>H178846 | 16-22-040/42<br>H328637 |
| 6 | 1 | Ventilsitz mit Spülkammer<br>Valve seat with flushing chamber | 1.4404 | 16-37-059/43<br>H178937 | 16-37-060/43<br>H178942 | 16-37-494/43<br>H176347 | 16-37-062/43<br>H178948 | 16-37-063/43<br>H178950 | 16-37-064/43<br>H328638 |
| 7 | 4 | Skt. Schraube<br>Hex. Screw DIN EN 24017-A2-70 | 1.4301 | 65-01-079/15<br>M8x14 H78768 | | | | | 65-01-130/15<br>M10x16 H78806 |
| 8 | 1 | Federzylinder<br>Spring actuator | 1.4301 | 16-30-500/17<br>H323172 | | | 16-30-501/17<br>H323201 | | 16-30-108/17<br>H150229 |
| 9 | 1 | Hauptzylinder<br>Main actuator | Vestamid | 15-31-239/93<br>H151072 | | | 15-31-240/93<br>H147795 | | 15-31-241/93<br>H150526 |
| 10 | 1 | Anlüftzylinder<br>Seat lifting device | Vestamid | 16-30-225/93<br>H151130 | | | 16-30-226/93<br>H147794 | | 16-30-227/93<br>H150525 |
| 11 | 1 | Anschlagschraube<br>Stop sleeve | Vestamid /<br>1.4057 | 16-28-260/93<br>H176400 | | | | | 16--28-262/32<br>H200728 |
| 12 | 3 | W-Verschraubung<br>Angular union G1/8" 6x1 | 1.4301 | 08-60-750/93<br>H208825 | | | | | |
| 13 | 2 | Initiatorhalterung<br>Mounting block | PA6.6 schwarz | 15-33-918/93<br>H154913 | | | | | |

Weitergabe sowie Vervielfältigung dieser Unterlage, Verwertung und Mitteilung ihres Inhalts nicht gestattet, soweit nicht schriftlich zugestanden. Verstoß verpflichtet zum Schadensersatz und kann strafrechtliche Folgen haben (Paragraph 18 UWG, Paragraph 106 UrhG). Eigentum und alle Rechte, auch für Patenterteilung und Gebrauchsmustereintragung, vorbehalten. APV Rosista GmbH.

Ersatzteilliste: spare parts list

# Doppelsitzventil DA3 1.5 - 6 Sh5
# Double seat valve DA3 1,5 - 6 Sh5

| | | | | |
|---|---|---|---|---|
| Datum: | 23.01.13 | 12.03.15 | | |
| Name: | Trytko | Trytko | | |
| Geprüft: | | | | |
| Datum: | | | | |
| Name: | | | | |
| Geprüft: | | | | |

APV
SPX Flow Technology Rosista GmbH
D-59425 Unna Germany

Blatt 3 von 6

**RN 01.053.73-2**

| pos. item | Menge quantity | Beschreibung description | Material material | 1,5 Sh5 WS-Nr. ref.-no. | 2 Sh5 WS-Nr. ref.-no. | 2,5 Sh5 WS-Nr. ref.-no. | 3 Sh5 WS-Nr. ref.-no. | 4 Sh5 WS-Nr. ref.-no. | 6 Sh5 WS-Nr. ref.-no. |
|---|---|---|---|---|---|---|---|---|---|
| 14 | 1 | Entlüftungsstopfen G1/8"<br>Venting plug | PE-Hard/Yellow | 08-60-005/93<br>H16218 | | | | | |
| 15 | 1 | Verschlußkappe ø11,1x5<br>Cap | PVC | 08-05-066/93<br>H154816 | | | | | |
| 16 | 1 | Sicherungsmutter<br>Stop nut | 1.4301 | 65-50-137/15<br>H147640 | | | | | |
| 17 | 1 | Sicherungsscheibe<br>Lock washer | 1.4301 | 67-03-001/15<br>H147639 | | | | | |
| 18 | 1 | Quadring Q4221-N7004<br>Quadring 36x3,53 | NBR | 58-01-237/83<br>H148386 | | | | | |
| 19 | 4 | Skt. Schraube DIN EN 24017-A2-70<br>Hex. Screw | 1.4301 | 65-01-114/15<br>M8x156 H152060 | | | 65-01-115/15<br>M8x168 H313215H | | 65-01-157/15<br>M10x204 H152018 |
| 20 | 1 | Kolbenstange Anlüftzylinder kpl.<br>Piston shaft for seat lifting device cpl. | 1.4301 | 16-29-065/17<br>H149396 | | | 16-29-066/17<br>H149654 | | 16-29-067/17<br>H150503 |
| 21 | 1 | Führungsband<br>PTFE driving band | Turcite 51 | 08-39-187/93<br>H147972 | | | | | |
| 22 | 3 | Quadring 28,1x3,53<br>Quadring | NBR | 58-01-236/83<br>H148385 | | | | | |
| 23 | 2 | Kolbendichtung<br>Piston seal | NBR | 58-01-760/83<br>H76868 | | | 58-01-761/83<br>H76869 | | 58-01-763/83<br>H76871 |
| 24 | 1 | Zylinderkerbstift 6x 14,8<br>Cyl. Pin | 1.4305 | 67-15-055/12<br>H147811 | | | | | |
| 25 | 2 | O-Ring<br>O-ring | NBR | 58-06-372/83<br>82,22x2,62 H150893 | | | 58-06-493/83<br>101,27x2,62 H148385 | | 58-06-696/83<br>154x3 H174262 |
| 26 | 1 | Kolben Hauptzylinder<br>Piston for main actuator | 1.4301 | 16-29-070/12<br>H149389 | | | 16-29-071/12<br>H147594 | | 16-29-072/12<br>H150291 |
| 27 | 1 | Deckel Hzyl.<br>Cover for main actuator | PA12 | 16-00-208/93<br>H149351 | 16-00-207/93<br>H149350 | | 16-00-210/93<br>H147750 | | 16-00-211/93<br>H150918 |
| 28 | 1 | Sprengring<br>Retainer ring | 1.4310 | 08-39-083/13<br>H14883 | | | | | |
| 29 | 1 | Führungsband<br>PTFE driving band | | 08-39-198/93<br>H150892 | | | 08-39-188/93<br>H147973 | | 08-39-185/93<br>H152006 |

Weitergabe sowie Vervielfältigung dieser Unterlage, Verwertung und Mitteilung ihres Inhalts nicht gestattet, soweit nicht schriftlich zugestanden. Verstoß verpflichtet zum Schadensersatz und kann strafrechtliche Folgen haben (Paragraph 18 UWG, Paragraph 106 UrhG). Eigentum und alle Rechte, auch für Patenterteilung und Gebrauchsmustereintragung, vorbehalten. APV Rosista GmbH.

Ersatzteilliste: spare parts list

# Doppelsitzventil DA3 1.5 - 6 Sh5
# Double seat valve DA3 1,5 - 6 Sh5

| | | | | |
|---|---|---|---|---|
| Datum: | 23.01.13 | 12.03.15 | | |
| Name: | Trytko | Trytko | | |
| Geprüft: | | | | |
| Datum: | | | | |
| Name: | | | | |
| Geprüft: | | | | |

APV
SPX Flow Technology Rosista GmbH
D-59425 Unna Germany

Blatt 4 von 6

**RN 01.053.73-2**

| pos. item | Menge quantity | Beschreibung description | Material material | 1,5 Sh5 WS-Nr. ref.-no. | 2 Sh5 WS-Nr. ref.-no. | 2,5 Sh5 WS-Nr. ref.-no. | 3 Sh5 WS-Nr. ref.-no. | 4 Sh5 WS-Nr. ref.-no. | 6 Sh5 WS-Nr. ref.-no. |
|---|---|---|---|---|---|---|---|---|---|
| 30 | 1 | Quadring<br>Quadring Q4230-N7502 | EPDM | 58-01-329/63<br>H150898 | | | 58-01-238/63<br>H148387 | | 58-01-791/63<br>H152005 |
| 31 | 1 | O-Ring<br>O-ring OR 9,25x1,78 | EPDM<br>FDA-konform | 58-06-029/64<br>H148388 | | | | | |
| 32 | 2 | Gehäusedichtung<br>Housing seal | EPDM<br>FDA-konform | 58-33-542/93<br>H77543 | | | 58-33-642/93<br>H77583 | | 58-33-742/93<br>H77625 |
| | 2 | Gehäusedichtung<br>Housing seal | FPM<br>FDA-konform | 58-33-542/73<br>H77542 | | | 58-33-642/73<br>H77582 | | 58-33-742/73<br>H77624 |
| | 2 | Gehäusedichtung<br>Housing seal | HNBR<br>FDA-konform | 58-33-542/33<br>H170075 | | | 58-33-642/33<br>H170074 | | 58-33-742/33<br>H172126 |
| 33 | 2 | Tellerdichtung<br>Seat seal | EPDM<br>FDA-konform | 58-33-493/93<br>H77515 | | | 58-33-643/93<br>H77586 | | 58-33-743/93<br>H77628 |
| | 2 | Tellerdichtung<br>Seat seal | FPM<br>FDA-konform | 58-33-493/73<br>H77514 | | | 58-33-643/73<br>H77585 | | 58-33-743/73<br>H77627 |
| | 2 | Tellerdichtung<br>Seat seal | HNBR<br>FDA-konform | 58-33-493/33<br>H166678 | | | 58-33-643/33<br>H166682 | | 58-33-743/33<br>H170177 |
| | 2 | Tellerdichtung<br>Seat seal | VMQ<br>FDA-konform | 58-33-493/13<br>H77513 | | | 58-33-643/13<br>H77584 | | 58-33-743/13<br>H77626 |
| 34 | 2 | Schaftdichtung<br>Shaft seal | PTFE | 58-33-016/23<br>H149620 | | | 58-33-017/23<br>H150708 | | 58-33-018/23<br>H150531 |
| 35 | 1 | Führungsring<br>Quide ring | PTFE<br>25%Kohle | 08-39-080/93<br>H14880 | | | | | |
| 36 | 2 | Sitzdichtung<br>Seat seal | EPDM<br>FDA-konform | 58-33-044/93<br>H149618 | | | 58-33-045/93<br>H149619 | | 58-33-046/93<br>H150529 |
| | 2 | Sitzdichtung<br>Seat seal | FPM<br>FDA-konform | 58-33-044/73<br>H153316 | | | 58-33-045/73<br>H153318 | | 58-33-046/73<br>H153937 |
| | 2 | Sitzdichtung<br>Seat seal | HNBR<br>FDA-konform | 58-33-044/33<br>H168900 | | | 58-33-045/33<br>H168901 | | 58-33-046/33<br>H168902 |
| | 2 | Sitzdichtung<br>Seat seal | VMQ<br>FDA-konform | 58-33-044/13<br>H153317 | | | 58-33-045/13<br>H153319 | | 58-33-046/13<br>H153938 |
| 37 | 1 | Sitzring<br>Seat ring | 1.4404 | 16-00-190/42<br>H149397 | | | 16-00-191/42<br>H148255 | | 16-00-193/42<br>H150409 |

Weitergabe sowie Vervielfältigung dieser Unterlage, Verwertung und Mitteilung ihres Inhalts nicht gestattet, soweit nicht schriftlich zugestanden. Verstoß verpflichtet zum Schadensersatz und kann strafrechtliche Folgen haben (Paragraph 18 UWG, Paragraph 106 UrhG). Eigentum und alle Rechte, auch für Patenterteilung und Gebrauchsmustereintragung, vorbehalten. APV Rosista GmbH.

Ersatzteilliste: spare parts list

# Doppelsitzventil DA3 1.5 - 6 Sh5
# Double seat valve DA3 1,5 - 6 Sh5

| | | | | |
|---|---|---|---|---|
| Datum: | 23.01.13 | 12.03.15 | | |
| Name: | Trytko | Trytko | | |
| Geprüft: | | | | |
| Datum: | | | | |
| Name: | | | | |
| Geprüft: | | | | |

APV
SPX Flow Technology Rosista GmbH
D-59425 Unna Germany



**RN 01.053.73-2**

| pos. item | Menge quantity | Beschreibung description | Material material | 1,5 Sh5 WS-Nr. ref.-no. | 2 Sh5 WS-Nr. ref.-no. | 2,5 Sh5 WS-Nr. ref.-no. | 3 Sh5 WS-Nr. ref.-no. | 4 Sh5 WS-Nr. ref.-no. | 6 Sh5 WS-Nr. ref.-no. |
|---|---|---|---|---|---|---|---|---|---|
| 38 | 1 | Mitteldichtung<br>Seal | EPDM<br>FDA-konform | 58-33-047/93<br>H149617 | | | 58-33-048/93<br>H149621 | | 58-33-049/93<br>H150530 |
| | 1 | Mitteldichtung<br>Seal | FPM<br>FDA-konform | 58-33-047/73<br>H153324 | | | 58-33-048/73<br>H153322 | | 58-33-049/73<br>H153939 |
| | 1 | Mitteldichtung<br>Seal | HNBR<br>FDA-konform | 58-33-047/33<br>H168903 | | | 58-33-048/33<br>H168904 | | 58-33-049/33<br>H168905 |
| | 1 | Mitteldichtung<br>Seal | VMQ<br>FDA-konform | 58-33-047/13<br>H153325 | | | 58-33-048/13<br>H153323 | | 58-33-049/13<br>H153940 |
| 39 | 1 | O-Ring<br>O-ring OR 12x1 | EPDM | 58-06-040/63<br>H169477 | | | | | |
| 40 | 1 | O-Ring<br>O-ring | EPDM<br>FDA-konform | 58-06-295/63<br>69 x3 H77039 | | | 58-06-490/63<br>100x3 H77061 | | 58-06-655/63<br>135x3 H77081 |
| 41 | 1 | Verschluß-Stopfen<br>Locking plug | Kunst. schwarz | 08-74-014/93<br>G 1/8" H16507 | | | | | 08-74-007/93<br>G 1/4" H176010 |
| 42 | 1 | Sechskant Mutter m. Klemmteil<br>Hexagon nut with clamp part M10x1 | 1.4301 | 65-50-087/15<br>H118903 | | | | | |
| 43 | 1 | G-Verschraubung<br>Straight union | PVDF-schwarz<br>/ PA6.6 | 08-63-003/13<br>G 1/8" H16388 | | | | | 08-63-006/13<br>G 1/4" H176011 |
| 44 | 1 | Anschlagring nur bei 6 Sh5<br>Stop ring only for 6 Sh5 | POM | | | | | | 08-39-001/93<br>H314101 |
| 45 | 1 | CU43-M-DC<br>CU43-M-DC | PA 6.6 GF30<br>schwarz | 08-45-105/93<br>H320465 | | | | | |
| | 1 | CU43-M-AS-I-extended<br>CU43-M-AS-I-extended | PA 6.6 GF30<br>schwarz | 08-45-115/93<br>H320472 | | | | | |
| | 1 | CU43-M-AS-I-standard<br>CU43-M-AS-I-standard | PA 6.6 GF30<br>schwarz | 08-45-255/93<br>H324678 | | | | | |
| 46 | 1 | CU4-M-Adapter komplett<br>CU4-M-adapter complete | PA 6.6 GF30<br>schwarz | 08-48-602/93<br>H320476 | | | | | |
| 47 | 1 | Luftschlauch 6 x 1<br>Air Hose (øAxI 6x4) | PA 12 "W | 08-75-020/53<br>H16516 | | | | | |
| | | | | | | | | | |

Weitergabe sowie Vervielfältigung dieser Unterlage, Verwertung und Mitteilung ihres Inhalts nicht gestattet, soweit nicht schriftlich zugestanden. Verstoß verpflichtet zum Schadensersatz und kann strafrechtliche Folgen haben (Paragraph 18 UWG, Paragraph 106 UrhG). Eigentum und alle Rechte, auch für Patenterteilung und Gebrauchsmustereintragung, vorbehalten. APV Rosista GmbH.

Ersatzteilliste: spare parts list

# Doppelsitzventil DA3 1.5 - 6 Sh5
# Double seat valve DA3 1,5 - 6 Sh5

| | | | | |
|---|---|---|---|---|
| Datum: | 23.01.13 | 12.03.15 | | |
| Name: | Trytko | Trytko | | |
| Geprüft: | | | | |
| Datum: | | | | |
| Name: | | | | |
| Geprüft: | | | | |

APV
SPX Flow Technology Rosista GmbH
D-59425 Unna Germany

Blatt 6 von 6

**RN 01.053.73-2**

| pos. item | Menge quantity | Beschreibung description | Material material | 1,5 Sh5 WS-Nr. ref.-no. | 2 Sh5 WS-Nr. ref.-no. | 2,5 Sh5 WS-Nr. ref.-no. | 3 Sh5 WS-Nr. ref.-no. | 4 Sh5 WS-Nr. ref.-no. | 6 Sh5 WS-Nr. ref.-no. |
|---|---|---|---|---|---|---|---|---|---|
| | 1 | Ventileinsatz<br>Valve insert | EPDM | 16-37-415/59<br>H178993 | 16-37-465/59<br>H178995 | 16-37-515/59<br>H178998 | 16-37-565/59<br>H179000 | 16-37-665/59<br>H179002 | 16-36-152/59<br>H328625 |
| | 1 | Ventileinsatz<br>Valve insert | FPM | 16-37-415/69 | 16-37-465/69 | 16-37-515/69 | 16-37-565/69 | 16-37-665/69 | 16-36-152/69 |
| | 1 | Ventileinsatz<br>Valve insert | HNBR | 16-37-415/29 | 16-37-465/29 | 16-37-515/29 | 16-37-565/29 | 16-37-665/29 | 16-36-152/29 |
| | 1 | Ventileinsatz<br>Valve insert | VMQ | 16-37-415/61 | 16-37-465/61 | 16-37-515/61 | 16-37-565/61 | 16-37-665/61 | 16-36-152/61 |
| | | | | | | | | | |
| | | | | | | | | | |
| | | **Pos. 29, 30, 31, 32, 33, 34, 36, 38, 39 nur im kompletten Dichtungssatz erhältlich**<br>**Item 29, 30, 31, 32, 33, 34, 36, 38, 39 available as complete seal kits only** | | | | | | | |
| | 1 | Dichtungssatz<br>Seal kit | FPM | 58-34-686/00<br>H202536 | | | 58-34-689/00<br>H202535 | | 58-34-692/00 |
| | 1 | Dichtungssatz<br>Seal kit | EPDM | 58-34-686/01<br>H179206 | | | 58-34-689/01<br>H179207 | | 58-34-692/01<br>H201787 |
| | 1 | Dichtungssatz<br>Seal kit | VMQ | 58-34-686/02<br>H201989 | | | 58-34-689/02<br>H201990 | | 58-34-692/02 |
| | 1 | Dichtungssatz<br>Seal kit | HNBR | 58-34-686/06<br>H179208 | | | 58-34-689/06<br>H179209 | | 58-34-692/06<br>H201786 |
| | | | | | | | | | |
| | | | | | | | | | |
| | | | | | | | | | |
| | | | | | | | | | |
| | | | | | | | | | |

Weitergabe sowie Vervielfältigung dieser Unterlage, Verwertung und Mitteilung ihres Inhalts nicht gestattet, soweit nicht schriftlich zugestanden.
Verstoß verpflichtet zum Schadensersatz und kann strafrechtliche Folgen haben (Paragraph 18 UWG, Paragraph 106 UrhG). Eigentum und alle Rechte,
auch für Patenterteilung und Gebrauchsmustereintragung, vorbehalten. SPX Flow Technology Rosista GmbH.

Ersatzteilliste: spare parts list

# Doppelsitzventil DA3 Mitteldichtung Version 2 DN40 - 150, 1,5"-4"
# Double seat valve middle seal version 2 DA3 DN40 - 150, 1,5"-4"

| | | | | |
|---|---|---|---|---|
| Datum: | 10.10.16 | | | |
| Name: | C.Keil | | | |
| Geprüft: | | | | |
| Datum: | | | | |
| Name: | | | | |
| Geprüft: | | | | |

SPX Flow Technology Rosista GmbH
D-59425 Unna Germany

Blatt 1 von 1

**RN 01.053.73**

| pos. item | Menge quantity | Beschreibung description | Material material | 40 WS-Nr. ref.-no. | 50 WS-Nr. ref.-no. | 65 WS-Nr. ref.-no. | 80 WS-Nr. ref.-no. | 100 WS-Nr. ref.-no. |
|---|---|---|---|---|---|---|---|---|
| 3 | 1 | DA3 Schaft Unten Version 2<br>DA3 lower shaft version 2 | 1.4404 | 000 16-24-400/42<br>H328270 | 000 16-24-450/42<br>H328271 | 000 16-24-500/42<br>H328272 | 000 16-24-550/42<br>H328274 | 000 16-24-675/42<br>H328276 |
| 5 | 1 | DA3 Schaft oben Version 2<br>DA3 upper shaft version 2 | 1.4404 | - | - | - | 000 16-22-546/42<br>H333592 | 000 16-22-646/42<br>H333619 |
| 35 | 1 | Führungsbuchse<br>guide ring | PTFE | - | - | - | 000 08-39-080/93<br>H14880 | |
| 38 | 1 | Mitteldichtung Version 2<br>middle seal version 2 | EPDM | 000 58-33-998/93<br>H327602 | | | 000 58-33-997/93<br>H327985 | |
| 38 | 1 | Mitteldichtung Version 2<br>middle seal version 2 | HNBR | 000 58-33-998/33<br>H332652 | | | 000 58-33-997/33<br>H332649 | |
| 38 | 1 | Mitteldichtung Version 2<br>middle seal version 2 | FPM | 000 58-33-998/71<br>H332653 | | | 000 58-33-997/71<br>H332648 | |
| 39 | 1 | O-Ring 12x1<br>O-ring 12x1 | EPDM | 000 58-06-040/63<br>H169477 | | | | |

| pos. item | Menge quantity | Beschreibung description | Material material | 1.5" WS-Nr. ref.-no. | 2" WS-Nr. ref.-no. | 2.5" WS-Nr. ref.-no. | 3" WS-Nr. ref.-no. | 4" WS-Nr. ref.-no. |
|---|---|---|---|---|---|---|---|---|
| 3 | 1 | DA3 Schaft Unten Version 2<br>DA3 lower shaft version 2 | 1.4404 | 000 16-24-400/42<br>H328270 | 000 16-24-450/42<br>H328271 | 000 16-24-525/42<br>H328273 | 000 16-24-575/42<br>H328275 | 000 16-24-675/42<br>H328276 |
| 5 | 1 | DA3 Schaft oben Version 2<br>DA3 upper shaft version 2 | 1.4404 | - | - | - | - | 000 16-22-646/42<br>H333619 |
| 35 | 1 | Führungsbuchse<br>guide ring | PTFE | - | - | - | - | 000 08-39-080/93<br>H14880 |
| 38 | 1 | Mitteldichtung Version 2<br>middle seal version 2 | EPDM | 000 58-33-998/93<br>H327602 | | | | 000 58-33-997/93<br>H327985 |
| 38 | 1 | Mitteldichtung Version 2<br>middle seal version 2 | HNBR | 000 58-33-998/33<br>H332652 | | | | 000 58-33-997/93<br>H327985 |
| 38 | 1 | Mitteldichtung Version 2<br>middle seal version 2 | FPM | 000 58-33-998/71<br>H332653 | | | | 000 58-33-997/71<br>H332648 |
| 39 | 1 | O-Ring 12x1<br>O-ring 12x1 | EPDM | 000 58-06-040/63<br>H169477 | | | | |

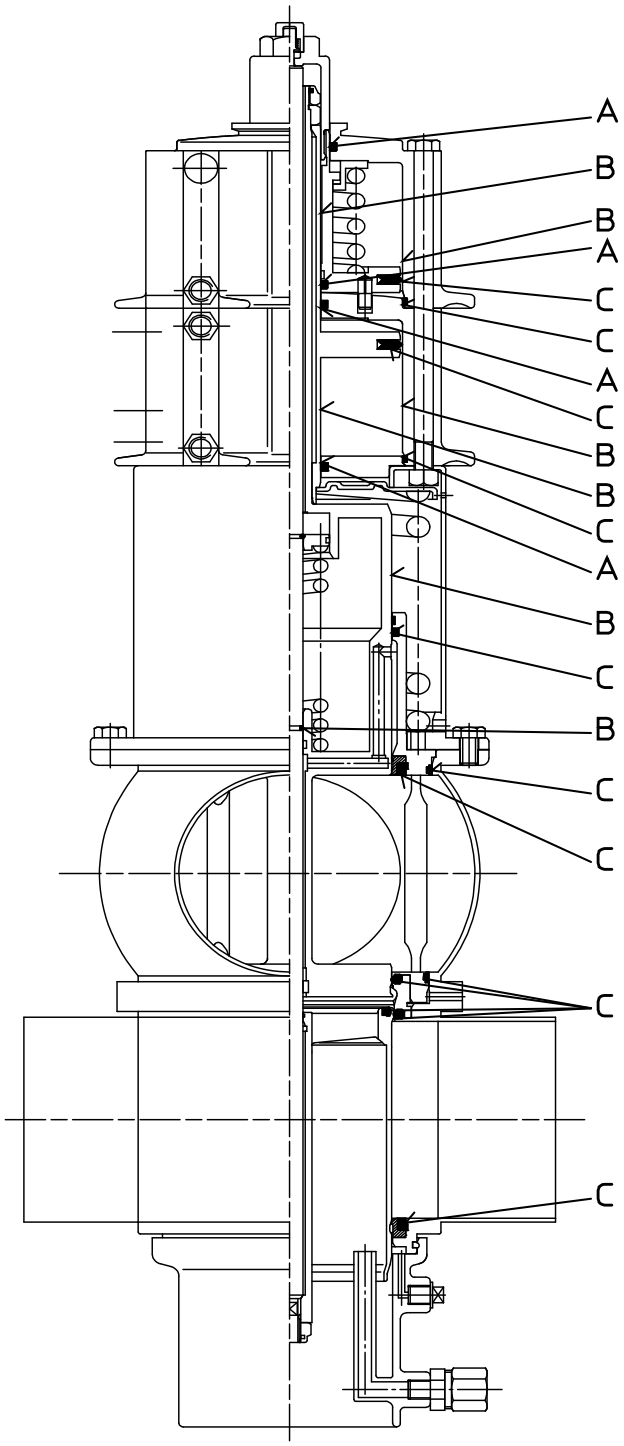


## Actuator parts:

Grease: Autol Top 2000
25 ml tube. ref.-No.:70-01-008/93

A - bearing surface and dynamic seal with continuous coating.

B - surface of cylinder and rod with continuous coating.

C - lightly grease seals for installation.

## Parts in contact with product:

Grease: for EPDM, HNBR and FPM
Klüber Paraliq GTE 703
0,75 kg can ref.-No.: 70-01-019/93
60 g tube ref.-No.: 70-01-018/93.

for VMQ.
Klüber UH1 84-201
0,6 kg can ref.-No.: 70-01-017/93
60 g tube ref.-No.: 70-01-016/93.

## C A U T I O N !

Avoid grease residues in product area.

Grease all screws and threads before installation.
Recommendation: Klüber Grease UH1 84-201

| | | | | | | | | | | |
|---|---|---|---|---|---|---|---|---|---|---|
| Datum: | 17.01.13 | | | | | | | | | |
| Name: | Trytko | | | | | | | | | |
| Geprüft: | | | | | | | | | | |

Ersatzteilliste: spare parts list

# DA3 Lubrication Chart

SPX Flow Technology Rosista GmbH
D-59425 Unna Germany

Blatt 1 von 1

**RNGB 260.064-1**

Weitergabe sowie Vervielfältigung dieser Unterlage, Verwertung und Mitteilung ihres Inhalts nicht gestattet, soweit nicht schriftlich zugestanden. Verstoß verpflichtet zum Schadensersatz und kann strafrechtliche Folgen haben (Paragraph 18 UWG, Paragraph 106 UrhG). Eigentum und alle Rechte, auch für Patenterteilung und Gebrauchsmustereintragung, vorbehalten. APV Rosista GmbH.

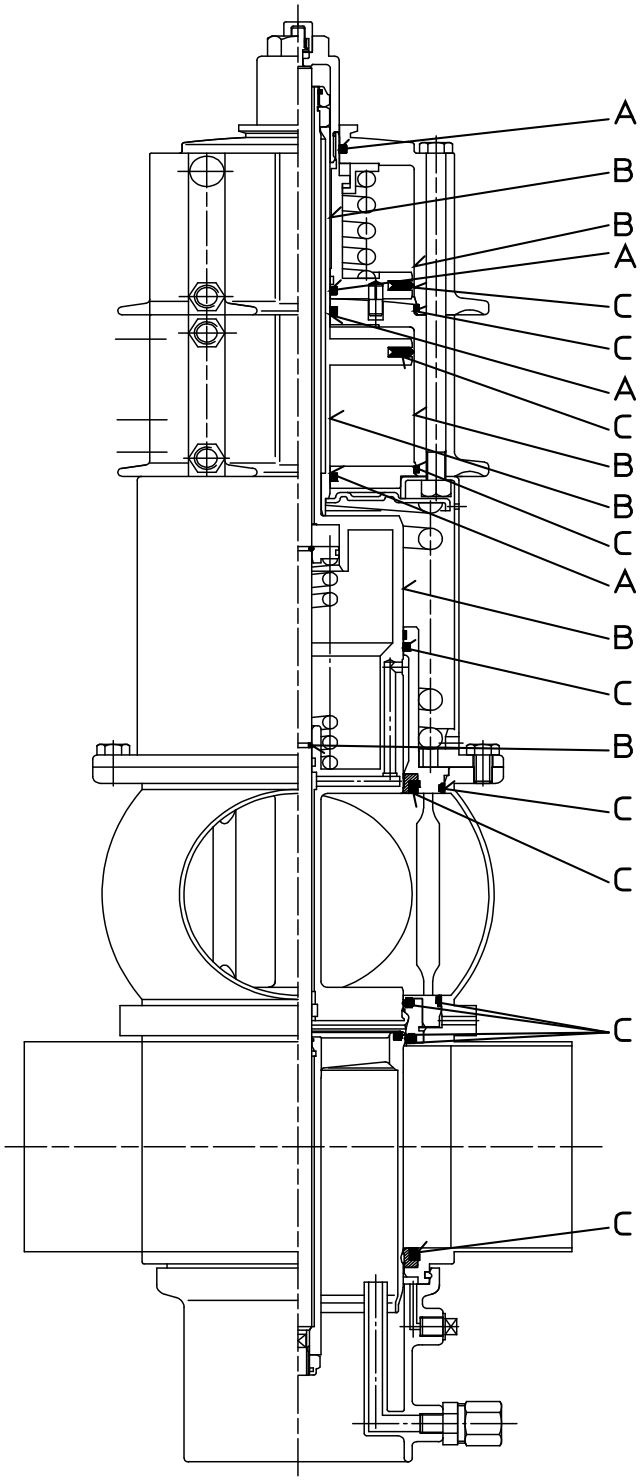


## Antriebsteile:

Fett: Autol Top 2000
25 ml Tube. WS-Nr.:70-01-008/93

A - Lagerlauffläche und dynamische Dichtung mit durchgehendem Fettfilm.

B - Lauffläche Zylinder bzw. Stange mit durchgehendem Fettfilm.

C - Dichtung für Montage leicht fetten.

## Produktberührte Bauteile:

Fett: Für EPDM, HNBR und FPM
Klüber Paraliq GTE 703
0,75 kg Dose WS-Nr.: 70-01-019/93
60 g Tube WS-Nr.: 70-01-018/93.

Für VMQ
Klüber UH1 84-201
0,6 kg Dose WS-Nr.: 70-01-017/93
60 g Tube WS-Nr.: 70-01-016/93.

## A C H T U N G !

Keine Fettreste im Produktraum.

Alle Schrauben und Gewindeteile vor Montage mit Fett versehen.
Empfehlung: Klüberpaste UH1 84-201

Weitergabe sowie Vervielfältigung dieser Unterlage, Verwertung und Mitteilung ihres Inhalts nicht gestattet, soweit nicht schriftlich zugestanden. Verstoß verpflichtet zum Schadensersatz und kann strafrechtliche Folgen haben (Paragraph 18 UWG, Paragraph 106 UrhG). Eigentum und alle Rechte, auch für Patenterteilung und Gebrauchsmustereintragung, vorbehalten. APV Rosista GmbH.

| | | | | | | | | | | |
|---|---|---|---|---|---|---|---|---|---|---|
| Datum: | 17.01.13 | | | | | | | | | |
| Name: | Trytko | | | | | | | | | |
| Geprüft: | | | | | | | | | | |

Ersatzteilliste: spare parts list

# DA3 Schmierplan

APV

SPX Flow Technology Rosista GmbH
D-59425 Unna Germany

Blatt 1 von 1

**RN 260.064-1**

# APV DELTA DA3+

**DOUBLE SEAT MIXPROOF VALVE**


**SPX FLOW**

**Design Center**

Gottlieb-Daimler-Straße 13

D-59439 Holzwickede, Germany

P: (+49) (0) 2301-9186-0

F: (+49) (0) 2301-9186-300

**SPX FLOW**

**Production**

Stefana Rolbieskiego 2

PL- Bydgoszcz 85-862, Poland

P: (+48) 52 566 76 00

F: (+48) 52 525 99 09



SPX FLOW reserves the right to incorporate the latest design and material changes without notice or obligation.

Design features, materials of construction and dimensional data, as described in this manual, are provided for your information only and should not be relied upon unless confirmed in writing. Please contact your local sales representative for product availability in your region. For more information visit www.spxflow.com.


Scan for DA3+ Valve Maintenance Video


ISSUED 12/2016 - Translation of original manual



COPYRIGHT ©2016 SPX FLOW, Inc.